HADCO

Urban

Refractive globe with LumiLock LED engine GX5

CL32/CL52 Post Top



Project:

Location:

Cat.No:

Type:

Lamps: Qty:

Notes:

Whether you are looking to beautify or add a sense of security and well-being to your outdoor space, the highly configurable Hadco LED refractive post tops paired with the latest LumiLock light engine GX5 will help you achieve your goals. A multitude of exterior luminaire styles allow you to create promenades and areas exuding timeless, historical charm both day and night. The configurable LED light engine GX5 is an ideal alternative to HID sources, providing you with significant energy savings, and more choices for light levels, optics and controls. Includes Service Tag, Hadco's innovative way to provide assistance throughout the life of the product.

Ordering guide

Example: CL32 G5 M D K A 1 A S R 740 A 4 S SP2

Series	Gen.	Top Reflector	Pod	Roof	Cage	Brim	Fastener	Finish	Optic	Pod Photo Control (located inside pod, only pick one)
CL32 Narrow Body Type 3 **CL52** Narrow Body Type 5	**G5** Gen 5	**R** Top Reflector (decreases uplight) **N** None	**H** Round contemporary **M**[1] Contemporary smooth tapered cone fitter **P**[1] Contemporary round fitter **R** Contemporary smooth tapered fitter	**D** Short **H** Round **J** Flat **K** Cone	**K** Cage 4 legs **L** Cage 8 legs **N** None	**A**[2] Brim **N** None	**1** Hex head **2** Allen head	**A** Black **B** White **G** Verde **H** Bronze **J** Green	**S** Short **W** Wide	**E** 120 VAC Button Eye **H** 208/240/277 Button Eye **R**[3,4] 3 Pin Receptacle **N** None

Color Temp	Voltage	Drive Current	Integral Control Options (only pick one)	Surge Protection
730 70CRI 3000K **740** 70CRI 4000K **827** 80CRI 2700K	**A** 120-277 VAC **B** 347-480 VAC **C**[7] 277-480 VAC	**1** 100 mA **2** 200 mA **3** 350 mA **4** 450 mA **5** 530 mA **6** 610 mA	**D4ID**[5] D4i certified DALI driver **S**[6] FAWS Field Adjustable Wattage Selector **N** None **0-10V dimming driver standard**	**SP1** 10kV/10kA Surge Protector **SP2** 20kV/10kA Surge Protector **SP1X** Fail-Off 10kV/10kA Surge Protector **SP2X** Fail-Off 20kV/10kA

1. Pods M and P fit 4" O.D. post top tenon.
2. Brim must be used with K or L cage.
3. 3-pin photocell receptacle R only available in H or M pod.
4. Use of photoelectric cell or shorting cap is required to ensure proper illumination. When R option is selected, product will ship with shorting cap installed.
5. D4i driver D4ID not available with B 347-480VAC. D4i driver D4ID replaces DA-DJ Dynadimmer or DL DALI driver with same functionality plus next generation extended DALI 2 functionality - contact factory for details.
6. FAWS S position 10 is open for receptacle control, must use one or the other but not BOTH. Position 10 does NOT reduce lumens or wattage.
7. Voltage C 277-480VAC not available with 100mA or 200mA.

Connected lighting

Interact City connector node provides the plug and play wireless communications technology to connect your street light to the Interact City lighting management system.



Ordering Code	Accessory Description
LLC	Interact City cellular technology connector node

Contact the factory for additional support when connected lighting or additional services are desired.

Narrow body Type 3 – Metal Roof

Catalog Logic	Color Temp. (K)	System Current (mA)	Avg. System Wattage (W)	No uplight reflector						Uplight reflector					
				Short			Wide			Short			Wide		
				Lumen Output	Efficacy (LPW)	BUG Rating	Lumen Output	Efficacy (LPW)	BUG Rating	Lumen Output	Efficacy (LPW)	BUG Rating	Lumen Output	Efficacy (LPW)	BUG Rating
CL32-G5-x-827-1	2700	100	20	2,516	117	B1-U3-G2	2,441	114	B1-U3-G3	2,631	122	B1-U3-G2	2,659	135	B1-U3-G3
CL32-G5-x-827-2	2700	200	39	4,910	120	B2-U4-G3	4,764	117	B2-U3-G4	5,134	126	B2-U4-G3	5,189	133	B2-U3-G4
CL32-G5-x-827-3	2700	350	67	7,968	119	B2-U4-G4	7,731	115	B2-U4-G5	8,332	124	B2-U4-G4	8,421	125	B2-U4-G5
CL32-G5-x-827-4	2700	450	87	9,940	115	B3-U5-G4	9,644	111	B3-U4-G5	10,393	120	B3-U5-G4	10,505	121	B3-U4-G5
CL32-G5-x-827-5	2700	530	101	11,232	111	B3-U5-G5	10,899	108	B3-U4-G5	11,745	116	B3-U5-G5	11,872	118	B3-U5-G5
CL32-G5-x-827-6	2700	610	118	12,796	108	B3-U5-G5	12,416	105	B3-U5-G5	13,380	113	B3-U5-G5	13,524	114	B3-U5-G5
CL32-G5-x-730-1	3000	100	20	2,934	149	B1-U3-G2	2,847	145	B1-U3-G3	3,068	156	B1-U3-G2	3,101	157	B1-U3-G3
CL32-G5-x-730-2	3000	200	39	5,725	147	B2-U4-G3	5,555	142	B2-U3-G4	5,987	154	B2-U4-G3	6,051	155	B2-U4-G4
CL32-G5-x-730-3	3000	350	67	9,291	138	B2-U5-G4	9,015	134	B3-U4-G5	9,715	145	B3-U5-G4	9,820	146	B3-U4-G5
CL32-G5-x-730-4	3000	450	87	11,590	134	B3-U5-G5	11,246	130	B3-U4-G5	12,119	140	B3-U5-G5	12,250	141	B3-U5-G5
CL32-G5-x-730-5	3000	530	101	13,098	130	B3-U5-G5	12,708	126	B3-U5-G5	13,696	136	B3-U5-G5	13,843	137	B3-U5-G5
CL32-G5-x-730-6	3000	610	118	14,921	126	B3-U5-G5	14,477	122	B3-U5-G5	15,602	132	B3-U5-G5	15,770	133	B3-U5-G5
CL32-G5-x-740-1	4000	100	20	3,144	160	B1-U3-G2	3,051	155	B1-U3-G3	3,288	167	B1-U3-G2	3,323	169	B1-U3-G3
CL32-G5-x-740-2	4000	200	39	6,135	157	B2-U4-G3	5,953	153	B2-U4-G4	6,416	165	B2-U4-G3	6,485	166	B2-U4-G4
CL32-G5-x-740-3	4000	350	67	9,956	148	B3-U5-G4	9,661	144	B3-U4-G5	10,411	155	B3-U5-G4	10,523	157	B3-U4-G5
CL32-G5-x-740-4	4000	450	87	12,420	143	B3-U5-G5	12,051	139	B3-U5-G5	12,988	150	B3-U5-G5	13,127	151	B3-U5-G5
CL32-G5-x-740-5	4000	530	101	14,036	139	B3-U5-G5	13,619	135	B3-U5-G5	14,677	146	B3-U5-G5	14,835	147	B3-U5-G5
CL32-G5-x-740-6	4000	610	118	15,990	135	B3-U5-G5	15,515	131	B3-U5-G5	16,720	141	B3-U5-G5	16,900	143	B3-U5-G5

Narrow body Type 5 – Metal Roof

Catalog Logic	Color Temp. (K)	System Current (mA)	Avg. System Wattage (W)	No uplight reflector						Uplight reflector					
				Short			Wide			Short			Wide		
				Lumen Output	Efficacy (LPW)	BUG Rating	Lumen Output	Efficacy (LPW)	BUG Rating	Lumen Output	Efficacy (LPW)	BUG Rating	Lumen Output	Efficacy (LPW)	BUG Rating
CL52-G5-x-827-1	2700	100	20	2,533	129	B1-U3-G2	2,441	124	B2-U3-G2	2,648	134	B1-U3-G2	2,658	135	B2-U3-G2
CL52-G5-x-827-2	2700	200	39	4,942	127	B2-U4-G3	4,763	122	B3-U3-G3	5,167	132	B2-U4-G3	5,187	133	B3-U3-G3
CL52-G5-x-827-3	2700	350	67	8,020	119	B3-U4-G3	7,730	115	B3-U4-G4	8,385	125	B3-U4-G3	8,417	125	B3-U4-G4
CL52-G5-x-827-4	2700	450	87	10,004	115	B3-U5-G3	9,643	111	B3-U4-G5	10,460	121	B3-U5-G3	10,500	121	B3-U4-G5
CL52-G5-x-827-5	2700	530	101	11,306	112	B3-U5-G4	10,897	108	B3-U4-G5	11,821	117	B3-U5-G4	11,866	118	B3-U4-G5
CL52-G5-x-827-6	2700	610	118	12,879	109	B3-U5-G4	12,414	105	B4-U5-G5	13,466	114	B3-U5-G4	13,517	114	B4-U5-G5
CL52-G5-x-730-1	3000	100	20	2,953	150	B2-U3-G2	2,847	144	B2-U3-G3	3,088	157	B2-U3-G2	3,100	157	B2-U3-G3
CL52-G5-x-730-2	3000	200	39	5,762	148	B3-U4-G3	5,554	142	B3-U3-G3	6,025	154	B3-U4-G3	6,048	155	B3-U3-G3
CL52-G5-x-730-3	3000	350	67	9,351	139	B3-U4-G3	9,013	134	B3-U4-G4	9,777	146	B3-U5-G3	9,815	146	B3-U4-G4
CL52-G5-x-730-4	3000	450	87	11,666	135	B3-U5-G4	11,244	130	B3-U4-G5	12,197	141	B3-U5-G4	12,244	141	B4-U5-G5
CL52-G5-x-730-5	3000	530	101	13,183	131	B3-U5-G4	12,707	126	B4-U5-G5	13,783	137	B3-U5-G4	13,836	137	B4-U5-G5
CL52-G5-x-730-6	3000	610	118	15,018	127	B4-U5-G4	14,475	122	B4-U5-G5	15,702	133	B4-U5-G4	15,762	133	B4-U5-G5
CL52-G5-x-740-1	4000	100	20	3,165	161	B2-U3-G2	3,050	155	B2-U3-G3	3,309	168	B2-U3-G2	3,322	169	B2-U3-G3
CL52-G5-x-740-2	4000	200	39	6,175	158	B3-U4-G3	5,952	153	B3-U4-G3	6,457	166	B3-U4-G3	6,481	166	B3-U4-G3
CL52-G5-x-740-3	4000	350	67	10,021	149	B3-U5-G3	9,659	144	B3-U4-G5	10,478	156	B3-U5-G3	10,518	157	B3-U4-G5
CL52-G5-x-740-4	4000	450	87	12,501	144	B3-U5-G4	12,050	139	B4-U5-G5	13,071	151	B3-U5-G4	13,121	151	B4-U5-G5
CL52-G5-x-740-5	4000	530	101	14,128	140	B3-U5-G4	13,617	135	B4-U5-G5	14,771	146	B4-U5-G4	14,827	147	B4-U5-G5
CL52-G5-x-740-6	4000	610	118	16,094	136	B4-U5-G5	15,513	131	B4-U5-G5	16,827	142	B4-U5-G5	16,891	143	B4-U5-G5

Values from photometric tests performed in accordance with IESNA LM-79 and are representative of the configurations shown. Actual performance may vary due to installation and environmental variables, LED and driver tolerances, and field measurement considerations. It is highly recommended to confirm performance with a photometric layout.

NOTE: Some data may be scaled based on tests of similar (but not identical) luminaires. Contact factory for configurations not shown.

CL32/CL52 Refractive Globe with LumiLock LED engine GX5

Dimensions

CL32 - Type 3

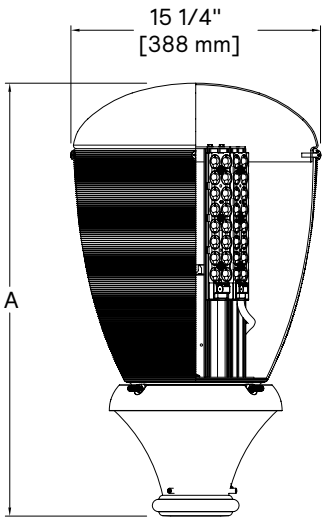

CL32G5NRHNNxxS configuration shown

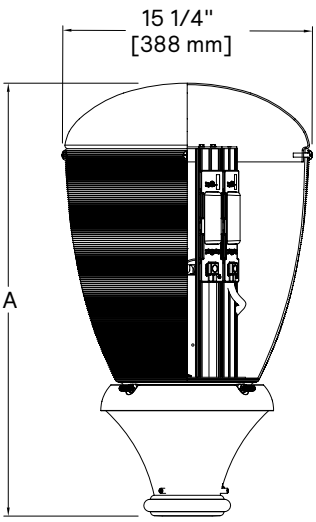

CL32G5NRHNNxxW configuration shown

CL52 - Type 5

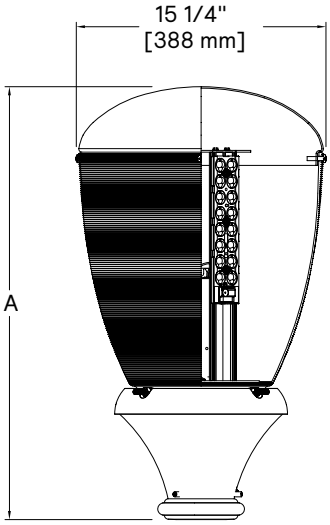

CL52G5NRHNNxxS configuration shown

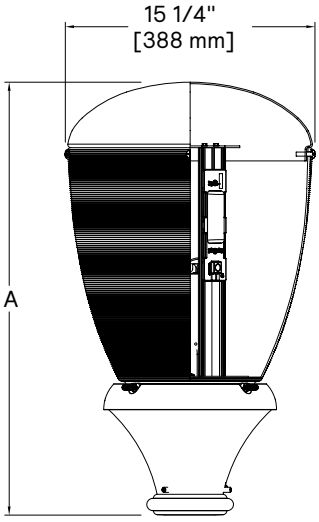

CL52G5NRHNNxxW configuration shown

Roof	Dimension "A"	
	(in)	(cm)
D Short	28.9	73.5
H Round	26.5	67.4
J Flat	27.6	70
K Cone	30.4	77.2

EPA: 2.08 sq. ft. (Varies depending on options selected)
Weight: 55lbs (maximum)

Dimensions will vary when other pod, cage and brim options are specified.
See specification text on pages 5 and 6 for option dimensions

Housing Options

Body Globe



Narrow Body
CL32/CL52

Brim



A Brim

Fitter/Pod Options



H Round
Contemporary



M Smooth
Tapered Cone



R Smooth
Tapered



P Round

Roof Options



H Round



J Flat



K Cone



D Short

Cage Options



K 4 Legs



L 8 Legs

Predicted Lumen Depreciation Data

Predicted performance derived up to LED manufacturer's data and engineering design estimates, based on IESNA LM-80 methodology. Actual experience may vary due to field application conditions. L_{70} is the predicted time when LED performance depreciates to 70% of initial lumen output. Calculated per IESNA TM21-11. Published L_{70} hours limited to 6 times actual LED test hours.

Ambient Temperature °C	Driver mA	Calculated L_{70} Hours	L_{70} per TM-21 (Hours)	Lumen Maintenance % at 60,000 hrs
25 °C	Up to 610 mA	>100,000 hrs	>100,000 hrs	>99%

Field Adjustable Wattage Selector (FAWS) Multiplier Chart

FAWS Position	Typical Delivered Lumens Multiplier	Typical System Wattage Multiplier
1	0.286	0.273
2	0.515	0.487
3	0.605	0.574
4	0.725	0.695
5	0.771	0.741
6	0.803	0.812
7	0.834	0.878
8	0.933	0.924
9	0.982	0.980
10	1.000	1.000

Note: Typical value accuracy +/- 5%

Specifications

Housing

Optional Pods:

Note: The following applies to ALL Pods:
• Accepts standard Hadco twistlock LumiLock LED light engines. Order appropriate RPTLD for retrofits/upgrades from HID to LED or to next generation LED – quickly and easily updated in the field.
• Globe holder has an internal water trap to prevent water from entering driver compartment.
• Rugged cast aluminum post fitter utilizes four (4) 5/16– 18 black cadmium stainless steel fasteners (Hex head or Allen head as specified).
• All hardware to be stainless steel and captive.
• Optional internal button eye photocell.

H: Round contemporary fitter is constructed of sand-cast 356 HM High-Strength cast aluminum, low copper for high resistance to corrosion. Optional internal twist-lock photo eye receptacle. Easy access to electrical components and photo eye receptacle or photo cell through the pod – door is tethered to pod to prevent accidental disengagement, toolless latch operable with protective gloves per ANSI C136.37. Mounts to 3" O.D. post tenon with 3" deep insertion per ANSI C136.3. Pod height is 10" & width is 10".

M: Contemporary smooth tapered cone fitter is constructed of sand-cast 356 HM High-Strength cast aluminum, low copper for high resistance to corrosion. Optional internal twist-lock photo eye receptacle. Easy access to electrical components and photo eye receptacle or photo cell through the pod – door is tethered to pod to prevent accidental disengagement, toolless latch operable with protective gloves per ANSI C136.37. Mounts to 4" O.D. post tenon with 3" deep insertion per ANSI C136.3.. Pod height is 11" and width is 10-1/2".

P: Contemporary round fitter is constructed of sand-cast 356 HM High-Strength cast aluminum, low copper for high resistance to corrosion. Easy access to electrical components and photo cell through the pod – door is tethered to pod to prevent accidental disengagement, toolless latch operable with protective gloves per ANSI C136.37. Mounts to 4" O.D. post tenon with 3" deep insertion per ANSI C136.3. Pod height is 9-1/2" and width is 10-1/2".

R: Contemporary smooth tapered fitter is constructed of sand-cast 356 HM High-Strength cast aluminum, low copper for high resistance to corrosion. Mounts to 3" O.D. post tenon with 3" deep insertion per ANSI C136.3. Pod height is 8" and width is 10".

Integrated feature

Terminal Block

Standard wiring terminal block accepts three (3) 8-18 AWG solid or stranded wires exceeding ANSI C136.32, located inside the pod – standard for all.

NOTE: Please note that this integrated feature always comes standard with all luminaires.

Label indicating line, neutral and ground available as an ETO – contact factory.

Wiring for connection to supply AC can be provided from the terminal block to run through the arm (when ordered separately) and / or down through the pole (ordered separately), available as an ETO – contact factory and please specify number of wires, insulation color(s), length(s), solid or stranded and AWG.

Brackets and Poles

Visit the website for pole and post top bracket options.

Globe Assembly

Narrow globe is constructed of clear injection molded U.V. stabilized acrylic. A two-piece (Globe and Roof) slip-fit, 1/2" overlap, design utilizes nutserts and stainless steel fasteners, which eliminates a seam appearance.

The optical section of the globe has a neck opening of 7-3/8" and an outside neck diameter of 8". Globe (less the roof) has a 15-1/2" height and 15" width at the top with 114 horizontal prisms and 360 highly polished vertical prisms.

Hadco's proprietary and purpose-built refractive globe technology provides improved horizontal and vertical lighting and uniformity enabling higher mounting heights, greater spacing, and further set backs.

Globe is held by utilizing four (4) 5/16-18 black cadmium stainless steel fasteners (Hex head or Allen head as specified – same as post fitter fasteners).

Standard one piece metal ring installed at factory protects acrylic globe neck from direct contact with fasteners.

Cast metal ring with cushioning gasket when no cage is ordered (does not fit with cage) available as an ETO – contact factory.

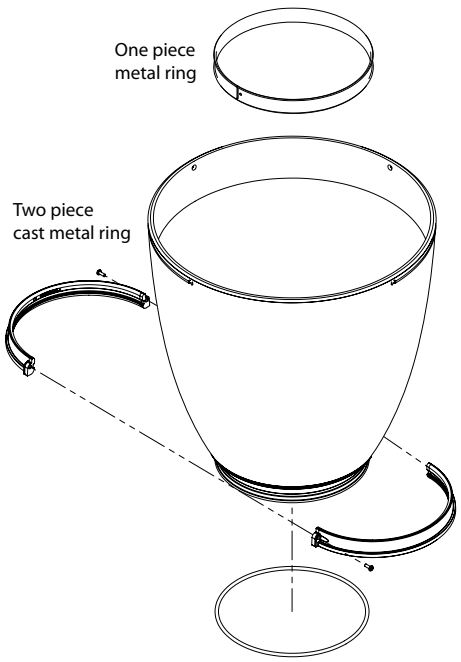

Roof

D: Roof is 0.090" thick spun aluminum. 6-1/2" height and 15-3/16" width. The roof and bottom globe sections are secured in a slip-fit, 1/2" overlap design and use four #10-24 stainless steel pan head screws with four aluminum nutserts providing a mechanical lock and enabling easy future replacement of either the roof or bottom globe section if required.

H: Roof is 0.090" thick spun aluminum. 4" height and 15" width. The roof and bottom globe sections are secured in a slip-fit, 1/2" overlap design and use four #10-24 stainless steel pan head screws with four aluminum nutserts providing a mechanical lock and enabling easy future replacement of either the roof or bottom globe section if required.

J: Roof is 0.090" thick spun aluminum. 5" height and 15-5/8" width. The roof and bottom globe sections are secured in a slip-fit, 1/2" overlap design and use four #10-24 stainless steel pan head screws with four aluminum nutserts providing a mechanical lock and enabling easy future replacement of either the roof or bottom globe section if required. Finish is polyester thermoset powdercoat.

K: Roof is 0.090" thick spun aluminum. 8" height and 15" width. The roof and bottom globe sections are secured in a slip-fit, 1/2" overlap design and use four #10-24 stainless steel pan head screws with four aluminum nutserts providing a mechanical lock and enabling easy future replacement of either the roof or bottom globe section if required.

Top Reflector

Aluminum top reflector decreases uplight, also redirects more light downward.

Cages

K: Cage for narrow globe (15" dia.). Constructed of 360 aluminum alloy, low copper for high resistance to corrosion. Cage has 4 curved legs, attached by a solid band. Height of cage is 16-7/8" and width of cage is 16-5/8".

L: Cage for narrow style globes (15" dia.). Constructed of 360 aluminum alloy, low copper for high resistance to corrosion. Cage has 8 curved legs, attached by a solid band. Height of cage is 16-7/8" and width of cage is 16-5/8".

Brim

A: Brim is 0.090" thick spun aluminum. Height is 3-1/2" and width is 28-3/8". The brim is only available with the cage option (K or L) and is attached to the cage via stainless steel fasteners.

Fasteners

Used to secure post fitter to post tenon and globe to globe holder.

1: Hex Head Bolts: Black cadmium stainless steel.

2: Allen Head Bolts: Black cadmium stainless steel.

Light engine

Composed of 4 main components: LED Module / Optical System / Heat Sink / Driver. Electrical components are RoHS compliant, IP66 sealed light engine. LEDs tested by ISO 17025-2005 accredited

Specifications (continued)

lab in accordance with IESNA LM-80 guidelines, extrapolations in accordance with IESNA TM-21. Metal core board ensures greater heat transfer and longer lifespan.

Entire light engine is an all inclusive assembly that is quickly and easily removable (including quick disconnect) while wearing protective gloves per ANSI C136.37 for retrofitting / upgrading in the field - see instructions for details.

LED Module

Composed of high-performance white LEDs. Color temperature as per ANSI/NEMA bin 3000K nominal (3045K +/- 175K) or 4000K nominal (3985K +/- 275K) CRI 70 min, or 2700K nominal (2725 ±145K) CRI 80 min.

Optical System

Composed of high performance UV stabilized optical grade polymer refractor lenses to achieve desired distribution optimized to get maximum spacing, target lumens and a superior lighting uniformity. System is rated IP66. Performance shall be tested per LM-63, LM-79 and TM-15 (IESNA) certifying its photometric performance.

Wide Optics: Superior performance and light level uniformity for applications where typical pole spacing is approximately six times mounting height of luminaire.

Short Optics: Superior performance and light level uniformity for applications where typical pole spacing is approximately five times mounting height of luminaire. Provides higher illumination levels under pole area, ideal for increased security and applications requiring superior facial recognition.

Type 3 and Type 5 distribution choices available. **NOTE:** Distribution can easily be changed in the field, and outer light engines can be easily adjusted (either individually or both) in the field to optimize lighting performance and/or address light trespass - see instructions for details. All wiring is full copper, with 105C rated insulation. LED modules are secured to heatsinks using #8 stainless steel hardware, guaranteeing construction rigidity and vibration resistance.

Heat sink

Consists of four extruded aluminum heat sinks optimizing the LEDs efficiency and life, clear anodized to Architectural Class II specifications for excellent corrosion resistance and surface finish. Extruded heatsinks meet or exceed tolerances as specified by AEC (Aluminum Extruders Council) standards and have been designed to provide superior surface flatness, ensuring excellent contact between heatsinks and LEDs. Heat sinks optimized for maximum natural convection heat transfer, does not use any cooling device with moving parts (passive cooling only).

Heat sinks are secured using galvanized steel brackets and stainless steel hardware to provide additional corrosion resistance.

Driver

Driver comes standard with 0-10V dimming capability. High power factor of 95%. Electronic driver, operating range 50/60 Hz. Auto adjusting universal voltage input from 120 to 277 VAC or 347 to 480 VAC or 277 to 480VAC rated for both application line to line or line to neutral, Class I, THD of 20% max. Driver operating ambient temperature range is -40F (-40C) to +130F (+55C). Certified in compliance to UL1310 or UL8750 cULus requirement (dry and damp location). The current supplying the LEDs will be reduced by the driver if the driver experiences internal overheating as a protection to the LEDs and the electrical components. Output is protected from short circuits, voltage overload and current overload. Automatic recovery after correction. Standard built in driver surge protection of 2.5kV or 6kV (min). Due to the inrush current that occurs with electronic drivers, recommend using a time-delay or slow blow fuse to avoid unwanted fuse blowing (false tripping) that can occur with normal or fast acting fuses.

Driver enables setting LED drive current to meet your specific total wattage consumption, lumen output and/or efficacy needs - ETO, contact factory.

Integral Control Options

D4ID*: D4i certified DALI driver. Replaces DADJ

Dynadimmer or DL DALI driver with same functionality plus next generation extended DALI 2 functionality - contact factory for details.

* This driver option ships with DALI bus power turned on and luminaire information loaded in Memory bank 1 as per ANSI C137.4 (2021). Consult factory for any other driver programming requirement.

S: Field Adjustable Wattage Selector (FAWS), pre set to the highest position, can be easily switched in the field to the required position. This reduces total luminaire wattage consumption and reduces the light level – see the FAWS multiplier chart for more details.

Note: It is not recommended to use FAWS with other dimming or controls; if you do, set the switch to position 10 (maximum output) to enable the other dimming or controls. Switching FAWS to any position other than 10 will disable the other dimming or controls.

Surge Protection Options

SP1: Fail-On surge protection device tested in accordance with ANSI/IEEE C62.45 per ANSI/IEEE C62.41.2 Scenario I Category C High Exposure 10kV/10kA waveforms for Line Ground, Line Neutral and Neutral Ground, and in accordance with U.S. DOE (Department of Energy) MSSLC (Municipal Solid State Street Lighting Consortium) model specification for LED roadway luminaires electrical immunity requirements for High Test Level 10kV / 10kA.

SP2: Fail-On 20kV/10kA surge protection device that provides extra protection beyond the SP1 10kV/10kA level.

SP1X: Fail-Off Surge protection device tested in accordance with ANSI/IEEE C62.45 per ANSI/ IEEE C62.41.2 Scenario I Category C High Exposure 10kV/10kA waveforms for Line-Ground, Line-Neutral and Neutral-Ground, and in accordance with DOE MSSLC Model Specification for LED Roadway Luminaires Appendix D Electrical Immunity High test level 10kV/10kA.

SP2X: Fail-Off 20kV/10kA surge protection device that provides extra protection beyond the SP1X 10kV/10kA level.

Finish

Color in accordance with the AAMA 2603 standard. Application of polyester powder coat paint (4 mils/100 microns) with ± 1 mils / 24 microns of tolerance. The Thermosetting resins provides a discoloration resistant finish in accordance with the ASTM D2244 standard, as well as luster retention in keeping with the ASTM D523 standard and humidity proof.

The standard finishes achieve a minimum scribe rating of 9 per ASTM D1654 after a minimum of 2000 hours salt spray in accordance with testing performed per ASTM B117 standard.

G Verde finish is professionally applied by our artisans on top of base A Black finish creating a vintage, authentically antiqued, gracefully weathered finish.

Other finish colors, RAL colors, marine finishes or coastal finishes available as an ETO - contact factory

Luminaire Useful Life

Refer to IES files for energy consumption and delivered lumens for each option. Based on ISTMT in situ thermal testing in accordance with UL1598 and UL8750, exclusive Signify System Reliability Tool, Advance driver data and LED manufacturer LM-80/ TM-21 data, expected to reach 100,000+ hours with >L70 lumen maintenance @ 25°C. Luminaire useful life accounts for LED lumen maintenance AND all of these additional factors including: LED color shift, LED life, driver life, PCB substrate, solder joints, on/ off cycles, burning hours and corrosion. Lifetime statements do not include the use of controls, including networked controllers.

LED products manufacturing standard

The electronic components sensitive to electrostatic discharge (ESD) such as light emitting diodes (LEDs) are assembled in compliance with IEC61340-5-1 and ANSI/ESD S20.20 standards so as to eliminate ESD events that could decrease the useful life of the product.

Vibration Resistance

Meets the ANSI C136.31-2010 specifications for Normal applications (does not include Cages), tested by a certified lab over 100,000 cycles in all three axes.

Service Tag

Each individual luminaire is uniquely identifiable, thanks to the Service tag application. With a simple scan of a QR code, placed inside the luminaire, you gain instant access to the luminaire configuration, making installation and maintenance operations faster and easier, no matter what stage of the luminaire's lifetime. Just download the app and register your product right away.

For more details visit: https://www.genlyte.com/en-us/solutions/technologies-and-innovation/service-tag.

Specifications (continued)

Certifications and Compliance

cETLus Listed for Canada and U.S. to the UL 1598 and UL8750 standards, suitable for Wet Locations. The quality systems of the facility where manufactured have been registered by UL to the ISO 9001 series standards. LM80 & LM79 tested. Configurations are DesignLights Consortium qualified, consult DLC QPL Qualified Products List for more details.

Suitable for use in ambients from -40°C (-40°F) to +40°C (+104°F). Luminaire complies with or exceeds the following ANSI C136 standards: .2, .3, .4, .10, .15, .16, .22, .24, .25, .31, .37, .41

IP Ratings

IP66 rated LED light engine.

IK Ratings

Refractive Globe is IK07 impact resistance rated.

Warranty

5-year limited warranty. Options available for extended warranties – contact factory.

See https://www.genlyte.com/en-us/support/warranties for details and restrictions.

NEMA Label

ANSI C136.15 compliant label available as an ETO – contact factory including which version / year is required.

Buy American Act of 1933 (BAA)

This product is manufactured in one of our US factories and, as of the date of this document, this product was considered a commercially available off-the-shelf (COTS) item meeting the requirements of the BAA.

This BAA designation hereunder does not address (i) the applicability of, or availability of a waiver under, the Trade Agreements Act, or (ii) the "Buy America" domestic content requirements imposed on states, localities, and other non-federal entities as a condition of receiving funds administered by the Department of Transportation or other federal agencies. Prior to ordering, please visit https://www.genlyte.com/en-us/resources/programs/domestic-preference to view a current list of BAA-compliant products to confirm this product's current compliance.

Build America, Buy America Act (BABA)

BABA establishes the minimum domestic content requirements that federal agencies must apply. This product is manufactured in the US and has a domestic content of 55% or more. This BABA designation does not address the "Buy America" domestic content requirements, which may be stricter, imposed on states, localities, and other non-federal entities as a condition of receiving funds administered by federal agencies. Please visit https://www.genlyte.com/en-us/resources/programs/domestic-preference.

Prior to ordering, please contact factory to confirm BABA or BABAF compliant configurations (BABAF for projects funded through FHWA must be funded by October 1, 2026), and please submit completed BABA checklist SGn-2452BN-Compliance-Certification-checklist.pdf.

© 2026 Signify Holding. All rights reserved. The information provided herein is subject to change, without notice. Signify does not give any representation or warranty as to the accuracy or completeness of the information included herein and shall not be liable for any action in reliance thereon. The information presented in this document is not intended as any commercial offer and does not form part of any quotation or contract, unless otherwise agreed by Signify.

GENLYTE SOLUTIONS
a Signify business

Signify North America Corp.
400 Crossing Blvd, Suite 600
Bridgewater, NJ 08807
Telephone: 800-555-0050

Signify Canada Ltd.
281 Hillmount Road,
Markham, ON, Canada L6C 2S3
Telephone: 800-668-9008

All trademarks are owned by Signify Holding or their respective owners.