HADCO

Urban

Refractive globe

with LumiLock LED engine GX5

RL34/RL54 Post Top



Whether you are looking to beautify or add a sense of security and well-being to your outdoor space, the highly configurable Hadco LED refractive post tops paired with the latest LumiLock light engine GX5 will help you achieve your goals. A multitude of exterior luminaire styles allow you to create promenades and areas exuding timeless, historical charm both day and night. The configurable LED light engine GX5 is an ideal alternative to HID sources, providing you with significant energy savings, and more choices for light levels, optics and controls. Includes Service Tag, Hadco's innovative way to provide assistance throughout the life of the product.

Project:

Location:

Cat.No:

Type:

Lamps: Qty:

Notes:

Ordering guide

example: RL34 G5 R B A B A 1 A S N R7 740 A 3 S SP1X

Series	Gen.	Top Reflector	Pod	Roof	Cage	Finial	Fastener	Finish	Optic	Pod Photo Control (located inside pod, only pick one)	Future Proof Photo Control	Color Temp.	Voltage	Drive Current	Integral Control Options (only pick one)	Surge Protection
RL34 Wide Body Type 3 **RL54** Wide Body Type 5	**G5** Gen 5	**R** Top Reflector (decreases uplight) **N** None	**A** Octagonal style **B** Round fitter with scalloped petals **G** Tall round fluted **H** Round contemporary **K** Classic fluted **L** Round fluted long **T** Decorative leaf w/scalloped petals	**A** Victorian **B** Acorn **C** Tall **D** Short **G** Adams	**B**[1] Cage for wide body globe **E** Band for wide body globe **F** Band for wide body globe **G**[1] Cage for wide body globe **I**[1] Cage for wide body globe **J**[1] Cage for wide body globe **N** None	**A** **B** **C**[2] **D**[2] **E**[2] **F** **G** **H** **N** None	**1** Hex head **2** Allen head	**A** Black **B** White **G** Verde **H** Bronze **J** Green	**S** Short **W** Wide	**E** 120 VAC Button Eye **H** 208/240/277 VAC Button Eye **R**[3] 3-Pin Receptacle **N** None	**R7**[3,4] 7-pin receptacle on the engine **N** None	**730** 70CRI 3000K **740** 70CRI 4000K **827** 80CRI 2700K	**A** 120-277 VAC **B** 347-480 VAC **C**[7] 277-480 VAC	**1** 100 mA **2** 200 mA **3** 350 mA **4** 450 mA **5** 530 mA **6** 610 mA	**D4ID**[5] D4i certified DALI driver **S**[6] FAWS Field Adjustable Wattage Selector **N** None **0–10V dimming driver standard**	**SP1** 10kV/10kA Surge Protector **SP2** 20kV/10kA Surge Protector **SP1X**[8] Fail-Off 10kV/10kA Surge Protector **SP2X**[8] Fail-Off 20kV/10kA Surge Protector

1. Cages B, G, I, J can not be used with A pod – do not fit.
2. Finials C, D, E can not be used with B roof – base of finials is too wide to fit on top of roof.
3. Use of photoelectric cell or shorting cap is required to ensure proper illumination. When R, R7 options are selected, product will ship with shorting cap(s) installed.
4. 7-pin receptacle R7 only available with A, C and G roofs – does not fit with B and D roofs. Interact City control node Astroclock version (ordered and shipped separately) will fit and communicate properly – other nodes need to be confirmed.
5. D4i driver D4ID not available with B 347–480VAC. D4i driver D4ID replaces DA–DJ Dynadimmer or DL DALI driver with same functionality plus next generation extended DALI 2 functionality – contact factory for details.
6. FAWS S position 10 is open for receptacle control, must use one or the other but not BOTH. Position 10 does NOT reduce lumens or wattage.
7. Voltage C 277–480VAC not available with 100mA or 200mA.
8. Fail-Off SP1X or SP2X not available with 3-pin receptacle R3 in pods A & G – both options together do not fit, choose one or the other.

Connected lighting

Interact City connector node provides the plug and play wireless communications technology to connect your street light to the Interact City lighting management system.



Ordering Code	Accessory Description
LLC	Interact City cellular technology connector node

Contact the factory for additional support when connected lighting or additional services are desired.

BABA BAA interact ready.

RL34/RL54 Refractive Globe with LumiLock LED engine GX5

Wide body Type 3 – Acrylic Roof

Ordering Code	Color Temp. (K)	System Current (mA)	Avg. System Wattage (W)	No uplight reflector						Uplight reflector					
				Short			Wide			Short			Wide		
				Lumen Output	Efficacy (LPW)	BUG Rating	Lumen Output	Efficacy (LPW)	BUG Rating	Lumen Output	Efficacy (LPW)	BUG Rating	Lumen Output	Efficacy (LPW)	BUG Rating
RL34-G5-x-x-A/B-x-827-1	2700	100	20	2,869	146	B1-U4-G2	2,900	147	B1-U4-G2	2,762	140	B1-U4-G2	2,812	143	B1-U4-G2
RL34-G5-x-x-A/B-x-827-2	2700	200	39	5,598	144	B2-U5-G3	5,659	145	B2-U5-G3	5,389	138	B2-U5-G3	5,487	141	B2-U5-G3
RL34-G5-x-x-A/B-x-827-3	2700	350	67	9,085	135	B2-U5-G4	9,183	137	B3-U5-G4	8,746	130	B2-U5-G4	8,904	133	B3-U5-G4
RL34-G5-x-x-A/B-x-827-4	2700	450	87	11,333	131	B3-U5-G5	11,456	132	B3-U5-G4	10,910	126	B3-U5-G5	11,108	128	B3-U5-G4
RL34-G5-x-x-A/B-x-827-5	2700	530	101	12,807	127	B3-U5-G5	12,946	128	B3-U5-G5	12,329	122	B3-U5-G5	12,553	124	B3-U5-G4
RL34-G5-x-x-A/B-x-827-6	2700	610	118	14,590	123	B3-U5-G5	14,748	125	B3-U5-G5	14,045	119	B3-U5-G5	14,300	121	B3-U5-G5
RL34-G5-x-x-A/B-x-730-1	3000	100	20	3,345	170	B1-U4-G3	3,382	172	B1-U4-G2	3,221	163	B1-U4-G3	3,279	166	B1-U4-G2
RL34-G5-x-x-A/B-x-730-2	3000	200	39	6,528	167	B2-U5-G4	6,599	169	B2-U5-G3	6,284	161	B2-U5-G4	6,398	164	B2-U5-G3
RL34-G5-x-x-A/B-x-730-3	3000	350	67	10,593	158	B3-U5-G5	10,708	159	B3-U5-G4	10,198	152	B2-U5-G5	10,383	155	B3-U5-G4
RL34-G5-x-x-A/B-x-730-4	3000	450	87	13,215	152	B3-U5-G5	13,358	154	B3-U5-G5	12,722	147	B3-U5-G5	12,953	149	B3-U5-G4
RL34-G5-x-x-A/B-x-730-5	3000	530	101	14,934	148	B3-U5-G5	15,096	150	B3-U5-G5	14,377	143	B3-U5-G5	14,638	145	B3-U5-G5
RL34-G5-x-x-A/B-x-730-6	3000	610	118	17,012	144	B3-U5-G5	17,197	145	B3-U5-G5	16,378	138	B3-U5-G5	16,675	141	B3-U5-G5
RL34-G5-x-x-A/B-x-740-1	4000	100	20	3,585	182	B1-U4-G3	3,624	184	B1-U4-G3	3,451	175	B1-U4-G3	3,514	178	B1-U4-G2
RL34-G5-x-x-A/B-x-740-2	4000	200	39	6,995	179	B2-U5-G4	7,071	181	B2-U5-G3	6,734	173	B2-U5-G4	6,857	176	B2-U5-G3
RL34-G5-x-x-A/B-x-740-3	4000	350	67	11,352	169	B3-U5-G5	11,475	171	B3-U5-G4	10,929	163	B3-U5-G5	11,127	166	B3-U5-G4
RL34-G5-x-x-A/B-x-740-4	4000	450	87	14,162	163	B3-U5-G5	14,315	165	B3-U5-G5	13,633	157	B3-U5-G5	13,881	160	B3-U5-G5
RL34-G5-x-x-A/B-x-740-5	4000	530	101	16,004	159	B3-U5-G5	16,177	160	B3-U5-G5	15,407	153	B3-U5-G5	15,686	156	B3-U5-G5
RL34-G5-x-x-A/B-x-740-6	4000	610	118	18,231	154	B3-U5-G5	18,429	156	B3-U5-G5	17,551	148	B3-U5-G5	17,870	151	B3-U5-G5

Wide body Type 5 – Acrylic Roof

Ordering Code	Color Temp. (K)	System Current (mA)	Avg. System Wattage (W)	No uplight reflector						Uplight reflector					
				Short			Wide			Short			Wide		
				Lumen Output	Efficacy (LPW)	BUG Rating	Lumen Output	Efficacy (LPW)	BUG Rating	Lumen Output	Efficacy (LPW)	BUG Rating	Lumen Output	Efficacy (LPW)	BUG Rating
RL54-G5-x-x-A/B-x-827-1	2700	100	20	2,876	146	B1-U4-G2	2,901	147	B2-U4-G2	2,783	141	B1-U4-G2	2,817	143	B2-U4-G2
RL54-G5-x-x-A/B-x-827-2	2700	200	39	5,612	144	B2-U5-G3	5,661	145	B3-U5-G3	5,430	139	B2-U5-G3	5,497	141	B3-U5-G2
RL54-G5-x-x-A/B-x-827-3	2700	350	67	9,108	136	B3-U5-G4	9,187	137	B3-U5-G3	8,811	131	B3-U5-G4	8,921	133	B3-U5-G3
RL54-G5-x-x-A/B-x-827-4	2700	450	87	11,362	131	B3-U5-G4	11,461	132	B4-U5-G3	10,992	127	B3-U5-G4	11,128	128	B4-U5-G3
RL54-G5-x-x-A/B-x-827-5	2700	530	101	12,839	127	B3-U5-G4	12,952	128	B4-U5-G4	12,421	123	B3-U5-G4	12,576	125	B4-U5-G3
RL54-G5-x-x-A/B-x-827-6	2700	610	118	14,627	124	B3-U5-G5	14,755	125	B4-U5-G4	14,150	120	B3-U5-G5	14,326	121	B4-U5-G4
RL54-G5-x-x-A/B-x-730-1	3000	100	20	3,354	170	B2-U4-G2	3,383	172	B2-U4-G2	3,245	165	B2-U4-G2	3,285	167	B2-U4-G2
RL54-G5-x-x-A/B-x-730-2	3000	200	39	6,544	168	B3-U5-G3	6,602	169	B3-U5-G3	6,331	162	B3-U5-G3	6,410	164	B3-U5-G3
RL54-G5-x-x-A/B-x-730-3	3000	350	67	10,620	158	B3-U5-G4	10,713	159	B3-U5-G3	10,274	153	B3-U5-G4	10,402	155	B3-U5-G3
RL54-G5-x-x-A/B-x-730-4	3000	450	87	13,248	153	B3-U5-G5	13,364	154	B4-U5-G4	12,817	148	B3-U5-G5	12,976	150	B4-U5-G4
RL54-G5-x-x-A/B-x-730-5	3000	530	101	14,972	148	B3-U5-G5	15,103	150	B4-U5-G4	14,484	144	B3-U5-G5	14,664	145	B4-U5-G4
RL54-G5-x-x-A/B-x-730-6	3000	610	118	17,055	144	B4-U5-G5	17,205	145	B4-U5-G4	16,500	140	B4-U5-G5	16,705	141	B4-U5-G4
RL54-G5-x-x-A/B-x-740-1	4000	100	20	3,594	182	B2-U4-G2	3,626	184	B2-U4-G2	3,477	177	B2-U4-G2	3,520	179	B2-U4-G2
RL54-G5-x-x-A/B-x-740-2	4000	200	39	7,013	180	B3-U5-G3	7,075	181	B3-U5-G3	6,785	174	B3-U5-G3	6,869	176	B3-U5-G3
RL54-G5-x-x-A/B-x-740-3	4000	350	67	11,381	169	B3-U5-G4	11,481	171	B4-U5-G3	11,010	164	B3-U5-G4	11,147	166	B4-U5-G3
RL54-G5-x-x-A/B-x-740-4	4000	450	87	14,197	164	B3-U5-G5	14,322	165	B4-U5-G4	13,735	158	B3-U5-G5	13,906	160	B4-U5-G4
RL54-G5-x-x-A/B-x-740-5	4000	530	101	16,044	159	B4-U5-G5	16,185	160	B4-U5-G4	15,522	154	B4-U5-G5	15,715	156	B4-U5-G4
RL54-G5-x-x-A/B-x-740-6	4000	610	118	18,277	155	B4-U5-G5	18,438	156	B4-U5-G5	17,682	150	B4-U5-G5	17,902	151	B4-U5-G4

Actual performance may vary due to installation variables including optics, mounting/ceiling height, dirt depreciation, light loss factor, etc.; highly recommended to confirm performance with a layout - contact Applications at signify.com/outdoorluminaires. Consult DLC QPL to confirm your specific fixture selection is DLC approved.
Note: Some data may be scaled based on tests of similar but not identical luminaries.

RL34/RL54 Refractive Globe with LumiLock LED engine GX5

Wide body Type 3 – Metal Roof

Ordering Code	Color Temp. (K)	System Current (mA)	Avg. System Wattage (W)	No uplight reflector						Uplight reflector					
				Short			Wide			Short			Wide		
				Lumen Output	Efficacy (LPW)	BUG Rating	Lumen Output	Efficacy (LPW)	BUG Rating	Lumen Output	Efficacy (LPW)	BUG Rating	Lumen Output	Efficacy (LPW)	BUG Rating
RL34-G5-x-x-C/D/G-x-827-1	2700	100	20	2,313	117	B1-U3-G2	2,136	108	B1-U3-G2	2,270	115	B1-U3-G2	2,397	122	B1-U3-G2
RL34-G5-x-x-C/D/G-x-827-2	2700	200	39	4,512	116	B2-U4-G3	4,169	107	B2-U3-G3	4,430	114	B2-U3-G3	4,676	120	B2-U3-G3
RL34-G5-x-x-C/D/G-x-827-3	2700	350	67	7,323	109	B2-U4-G4	6,765	101	B3-U3-G4	7,189	107	B2-U4-G4	7,589	113	B3-U4-G4
RL34-G5-x-x-C/D/G-x-827-4	2700	450	87	9,135	105	B3-U5-G5	8,439	97	B3-U4-G4	8,968	103	B3-U4-G5	9,467	109	B3-U4-G5
RL34-G5-x-x-C/D/G-x-827-5	2700	530	101	10,323	102	B3-U5-G5	9,537	95	B3-U4-G5	10,135	100	B3-U5-G5	10,699	106	B3-U4-G5
RL34-G5-x-x-C/D/G-x-827-6	2700	610	118	11,760	99	B3-U5-G5	10,865	92	B3-U4-G5	11,545	98	B3-U5-G5	12,188	103	B3-U5-G5
RL34-G5-x-x-C/D/G-x-730-1	3000	100	20	2,697	137	B1-U3-G3	2,491	126	B1-U3-G2	2,647	134	B1-U3-G3	2,795	142	B1-U3-G2
RL34-G5-x-x-C/D/G-x-730-2	3000	200	39	5,262	135	B2-U4-G3	4,861	125	B2-U3-G3	5,166	132	B2-U4-G3	5,453	140	B2-U3-G3
RL34-G5-x-x-C/D/G-x-730-3	3000	350	67	8,539	127	B3-U4-G5	7,889	117	B3-U3-G4	8,383	125	B2-U4-G4	8,849	132	B3-U4-G4
RL34-G5-x-x-C/D/G-x-730-4	3000	450	87	10,652	123	B3-U5-G5	9,841	114	B3-U4-G5	10,457	121	B3-U5-G5	11,039	127	B3-U4-G5
RL34-G5-x-x-C/D/G-x-730-5	3000	530	101	12,037	119	B3-U5-G5	11,121	110	B3-U4-G5	11,818	117	B3-U5-G5	12,475	124	B3-U5-G5
RL34-G5-x-x-C/D/G-x-730-6	3000	610	118	13,713	116	B3-U5-G5	12,669	107	B3-U4-G5	13,463	114	B3-U5-G5	14,212	120	B3-U5-G5
RL34-G5-x-x-C/D/G-x-740-1	4000	100	20	2,890	147	B1-U3-G3	2,670	136	B1-U3-G3	2,837	144	B1-U3-G3	2,995	152	B1-U3-G3
RL34-G5-x-x-C/D/G-x-740-2	4000	200	39	5,639	145	B2-U4-G4	5,209	134	B2-U3-G3	5,536	142	B2-U4-G3	5,844	150	B2-U3-G3
RL34-G5-x-x-C/D/G-x-740-3	4000	350	67	9,150	136	B3-U5-G5	8,454	126	B3-U4-G4	8,984	134	B3-U4-G5	9,483	141	B3-U4-G5
RL34-G5-x-x-C/D/G-x-740-4	4000	450	87	11,415	132	B3-U5-G5	10,546	122	B3-U4-G5	11,207	129	B3-U5-G5	11,830	136	B3-U5-G5
RL34-G5-x-x-C/D/G-x-740-5	4000	530	101	12,900	128	B3-U5-G5	11,918	118	B3-U4-G5	12,664	126	B3-U5-G5	13,369	133	B3-U5-G5
RL34-G5-x-x-C/D/G-x-740-6	4000	610	118	14,695	124	B3-U5-G5	13,577	115	B3-U4-G5	14,427	122	B3-U5-G5	15,230	129	B3-U5-G5

Wide body Type 5 – Metal Roof

Ordering Code	Color Temp. (K)	System Current (mA)	Avg. System Wattage (W)	No uplight reflector						Uplight reflector					
				Short			Wide			Short			Wide		
				Lumen Output	Efficacy (LPW)	BUG Rating	Lumen Output	Efficacy (LPW)	BUG Rating	Lumen Output	Efficacy (LPW)	BUG Rating	Lumen Output	Efficacy (LPW)	BUG Rating
RL54-G5-x-x-C/D/G-x-827-1	2700	100	20	2,319	118	B1-U3-G2	2,132	108	B2-U3-G2	2,306	117	B1-U3-G2	2,363	120	B2-U3-G2
RL54-G5-x-x-C/D/G-x-827-2	2700	200	39	4,525	116	B2-U3-G3	4,159	107	B3-U3-G3	4,499	115	B2-U3-G3	4,610	118	B3-U3-G3
RL54-G5-x-x-C/D/G-x-827-3	2700	350	67	7,343	109	B3-U4-G3	6,750	100	B3-U3-G3	7,301	109	B3-U4-G3	7,481	111	B3-U4-G3
RL54-G5-x-x-C/D/G-x-827-4	2700	450	87	9,160	106	B3-U4-G4	8,420	97	B3-U4-G3	9,108	105	B3-U4-G4	9,333	108	B4-U4-G4
RL54-G5-x-x-C/D/G-x-827-5	2700	530	101	10,351	103	B3-U5-G4	9,516	94	B4-U4-G4	10,293	102	B3-U5-G4	10,547	105	B4-U4-G4
RL54-G5-x-x-C/D/G-x-827-6	2700	610	118	11,792	100	B3-U5-G5	10,840	92	B4-U4-G4	11,726	99	B3-U5-G5	12,015	102	B4-U4-G4
RL54-G5-x-x-C/D/G-x-730-1	3000	100	20	2,704	137	B2-U3-G2	2,486	126	B2-U3-G2	2,689	136	B2-U3-G2	2,755	140	B2-U3-G2
RL54-G5-x-x-C/D/G-x-730-2	3000	200	39	5,276	135	B3-U4-G3	4,850	124	B3-U3-G3	5,246	135	B3-U4-G3	5,376	138	B3-U3-G3
RL54-G5-x-x-C/D/G-x-730-3	3000	350	67	8,562	127	B3-U4-G4	7,871	117	B3-U3-G3	8,514	127	B3-U4-G4	8,724	130	B3-U4-G3
RL54-G5-x-x-C/D/G-x-730-4	3000	450	87	10,681	123	B3-U5-G4	9,819	113	B4-U4-G4	10,621	123	B3-U5-G4	10,882	126	B4-U4-G4
RL54-G5-x-x-C/D/G-x-730-5	3000	530	101	12,070	120	B3-U5-G5	11,096	110	B4-U4-G4	12,002	119	B3-U5-G5	12,298	122	B4-U5-G4
RL54-G5-x-x-C/D/G-x-730-6	3000	610	118	13,750	116	B4-U5-G5	12,640	107	B4-U4-G4	13,673	116	B4-U5-G5	14,010	118	B4-U5-G5
RL54-G5-x-x-C/D/G-x-740-1	4000	100	20	2,898	147	B2-U3-G2	2,664	135	B2-U3-G2	2,881	146	B2-U3-G2	2,952	150	B2-U3-G2
RL54-G5-x-x-C/D/G-x-740-2	4000	200	39	5,654	145	B3-U4-G3	5,198	133	B3-U3-G3	5,622	144	B3-U4-G3	5,761	148	B3-U3-G3
RL54-G5-x-x-C/D/G-x-740-3	4000	350	67	9,175	137	B3-U4-G4	8,435	126	B3-U4-G3	9,124	136	B3-U4-G4	9,349	139	B4-U4-G4
RL54-G5-x-x-C/D/G-x-740-4	4000	450	87	11,446	132	B3-U5-G4	10,522	121	B4-U4-G4	11,382	131	B3-U5-G4	11,662	135	B4-U4-G4
RL54-G5-x-x-C/D/G-x-740-5	4000	530	101	12,935	128	B3-U5-G5	11,891	118	B4-U4-G4	12,862	128	B3-U5-G5	13,179	131	B4-U5-G4
RL54-G5-x-x-C/D/G-x-740-6	4000	610	118	14,735	125	B4-U5-G5	13,546	115	B4-U4-G5	14,652	124	B4-U5-G5	15,014	127	B4-U5-G5

Actual performance may vary due to installation variables including optics, mounting/ceiling height, dirt depreciation, light loss factor, etc.; highly recommended to confirm performance with a layout - contact Applications at signify.com/outdoorluminaires. Consult DLC QPL to confirm your specific fixture selection is DLC approved.
Note: Some data may be scaled based on tests of similar but not identical luminaries.

RL34/RL54 Refractive Globe with LumiLock LED engine GX5

Dimensions

RL34 - Type 3

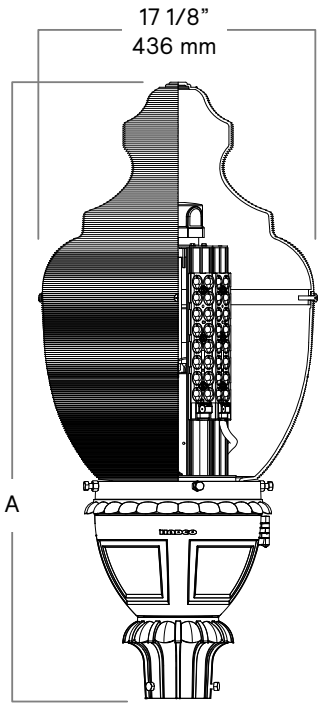

RL34G5NBANNxxS
configuration shown

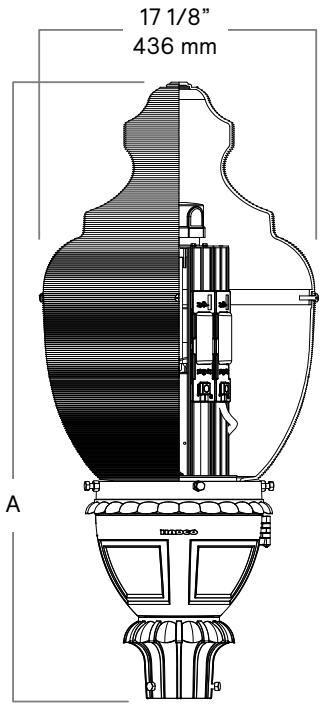

RL34G5NBANNxxW
configuration shown

RL54 - Type 5

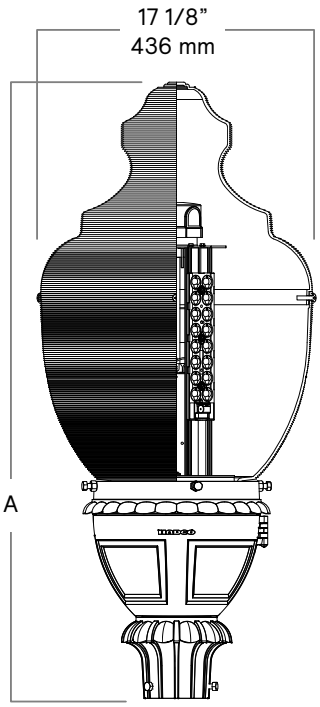

RL54G5NBANNxxS
configuration shown

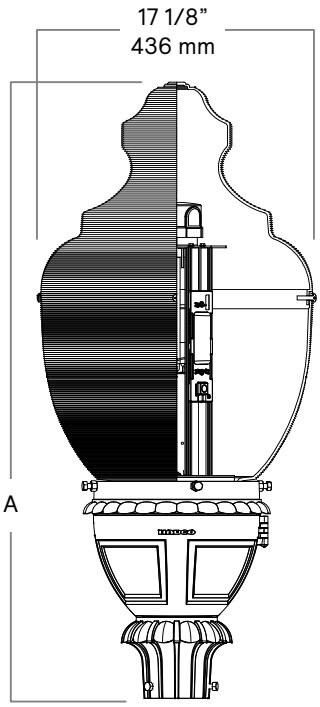

RL54G5NBANNxxW
configuration shown

Roof	Dimension "A"	
	(in)	(cm)
A Victorian	37.9	96.3
B Acorn	34.4	87.3
C Tall	36.3	92.2
D Short	32.0	81.3
G Adams	35.7	90.7

EPA: 2.08 sq. ft. (Varies depending on options selected)
Weight: 43 lbs (G pod) to 55lbs maximum (T pod)

Dimensions will vary when other pod, cage and brim options are specified.
See specification text on pages 5 and 6 for option dimensions

Housing Options

Fitter/Pod Options



A Octagonal



B Round with Scalloped Petals



G Tall Round Fluted



H Round Contemporary



K Classic fluted pod



L Round Fluted Long



T Decorative Leaf w/Scalloped Petals

Roof Options



A Victorian



B Acorn



C Tall



D Short



G Adams

Cage/Band Options



B Cage for Wide Body Globe



E Band for Wide Body Globe



F Band for Wide Body Globe



G Cage for Wide Body Globe



I Cage for Wide Body Globe



J Cage for Wide Body Globe

Finial Options



A



B



C



D



E



F



G



H

Predicted Lumen Depreciation Data

Predicted performance derived up to LED manufacturer's data and engineering design estimates, based on IESNA LM-80 methodology. Actual experience may vary due to field application conditions. L_{70} is the predicted time when LED performance depreciates to 70% of initial lumen output. Calculated per IESNA TM21-11. Published L_{70} hours limited to 6 times actual LED test hours.

Ambient Temperature °C	Driver mA	Calculated L_{70} Hours	L_{70} per TM-21 (Hours)	Lumen Maintenance % at 60,000 hrs
25 °C	Up to 610 mA	>100,000 hrs	>100,000 hrs	>99%

Field Adjustable Wattage Selector (FAWS) Multplier Chart

FAWS Position	Typical Delivered Lumens Multiplier	Typical System Wattage Multiplier
1	0.286	0.273
2	0.515	0.487
3	0.605	0.574
4	0.725	0.695
5	0.771	0.741
6	0.803	0.812
7	0.834	0.878
8	0.933	0.924
9	0.982	0.980
10	1.000	1.000

Note: Typical value accuracy +/- 5%

Specifications

Housing

Optional Pods

Note: The following applies to ALL Pods:

- Accepts standard Hadco twistlock LumiLock LED light engines. Order appropriate RPTLD for retrofits / upgrades from HID to LED or to next generation LED - quickly and easily updated in the field.
- Globe holder has an internal water trap to prevent water from entering driver compartment.
- Rugged cast aluminum post fitter utilizes four (4) 5/16-18 black cadmium stainless steel fasteners (Hex head or Allen head as specified) for mounting to 3" O.D. post tenon with 3" deep insertion per ANSI C136.3.
- All hardware to be stainless steel and captive.
- Optional internal button eye photocell.

A: Octagonal style fitter is constructed of die-cast 360 aluminum alloy, low copper for high resistance to corrosion. Optional internal twist-lock photo eye receptacle. Easy access to electrical components and photo eye receptacle or photo cell through the captive side-hinged door on the pod providing 135° entry - closure hardware captive and operable while wearing protective gloves. Pod height is 10-3/4" & width is 10-1/4".

B: Round fitter with scalloped petals is constructed of die-cast 360 aluminum alloy, low copper for high resistance to corrosion. Optional internal twist-lock photo eye receptacle. Easy access to electrical components and photo eye receptacle or photo cell through the captive side-hinged door on the pod providing 180° entry - toolless latch operable with protective gloves per ANSI C136.37. Pod height is 12-1/4" & width is 11-1/2".

G: Tall Round fluted fitter is constructed of die-cast 360 aluminum alloy, low copper for high resistance to corrosion. Optional internal twist-lock photo eye receptacle. Easy access to electrical components and photo eye receptacle or photo cell through the pod - door is tethered to pod to prevent accidental disengagement, closure hardware captive and operable with flat blade screwdriver while wearing protective gloves per ANSI C136.37. Pod height is 9" & width is 9".

H: Round contemporary fitter is constructed of sand-cast 356 HM High-Strength cast aluminum, low copper for high resistance to corrosion. Optional internal twist-lock photo eye receptacle. Easy access to electrical components and photo eye receptacle or photo cell through the pod - door is tethered to pod to prevent accidental disengagement, toolless latch operable with protective gloves per ANSI C136.37. Pod height is 10" & width is 10".

K: Classic fluted fitter is constructed of sand-cast 356 HM High-Strength cast aluminum, low copper for high resistance to corrosion. Optional internal twist-lock photo eye receptacle. Easy access to electrical components and photo eye receptacle or photo cell through the captive side-hinged door on the pod providing 180° entry - toolless latch operable with protective gloves per ANSI C136.37. Pod height is 14" & width is 11".

L: Round fluted long fitter is constructed of sand-cast 356 HM High-Strength cast aluminum, low copper for high resistance to corrosion. Optional internal twist-lock photo eye receptacle. Easy access to electrical components and photo eye receptacle or photo cell through the pod - door is tethered to pod to prevent accidental disengagement, toolless latch operable with protective gloves per ANSI C136.37. Pod height is 12-1/2" & width is 10-3/4".

T: Decorative Leaf fitter with scalloped petals is constructed of sand-cast 356 HM High-Strength cast aluminum, low copper for high resistance to corrosion. Optional internal twist-lock photo eye receptacle. Easy access to electrical components and photo eye receptacle or photo cell through the captive side-hinged door on the pod providing 180° entry - toolless latch operable with protective gloves per ANSI C136.37.
Pod height is 15-1/4" & width is 11-1/2".

Integrated Feature

Terminal Block

Standard wiring terminal block accepts three (3) 8-18 AWG solid or stranded wires exceeding ANSI C136.32, located inside the pod - standard for all.

Note: Please note that this integrated feature always comes standard with all luminaires.

Label indicating line, neutral and ground available as an ETO - contact factory.

Wiring for connection to supply AC can be provided from the terminal block to run through the arm (when ordered separately) and / or down through the pole (ordered separately), available as an ETO - contact factory and please specify number of wires, insulation color(s), length(s), solid or stranded and AWG.

Brackets and Poles

Visit the website for pole and post top bracket options.

Specifications (continued)

Globe Assembly

Wide globe is constructed of clear injection molded U.V. stabilized acrylic. A two-piece (Globe and Roof) slip-fit, 1/2" overlap, design utilizes nutserts and stainless steel fasteners, which eliminates a seam appearance.
The globe has a neck opening of 7-3/8" and an outside neck diameter of 8". The globe has a 12-7/8" height and 16-3/4" width at the top with 98 horizontal prisms and 360 highly polished vertical prisms.

Hadco's proprietary and purpose-built refractive globe technology provides improved horizontal and vertical lighting and uniformity enabling higher mounting heights, greater spacing, and further set backs.

Globe is held by utilizing four (4) 5/16-18 black cadmium stainless steel fasteners (Hex head or Allen head as specified - same as post fitter fasteners).

Standard one piece metal ring installed at factory protects acrylic globe neck from direct contact

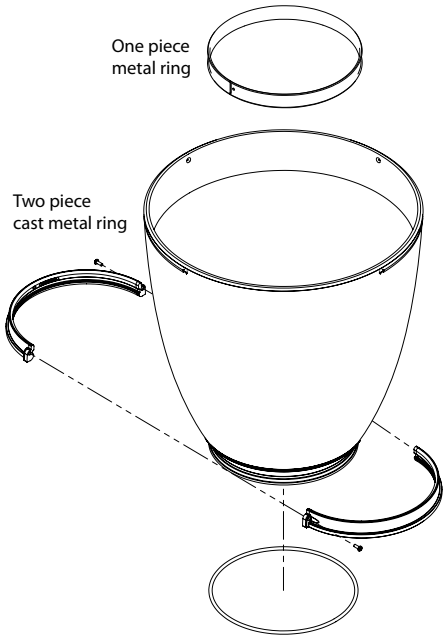

with fasteners. Cast metal ring with cushioning gasket when no cage is ordered (does not fit with cage) available as an ETO - contact factory.

Roof

A: Victorian style roof is clear injection molded U.V. stabilized acrylic with 99 horizontal prisms for a soft, even glow. 13" height and 16-1/2" width. The roof and bottom globe sections are secured in a slip-fit, 1/2" overlap design and use four #10-24 stainless steel pan head screws with four aluminum nutserts providing a mechanical lock and enabling easy future replacement of either the roof or bottom globe section if required.

B: Acorn style roof is clear injection molded U.V. stabilized acrylic with 74 horizontal prisms for a soft, even glow. 9-1/2" height and 16-3/4" width. The roof and bottom globe sections are secured in a slip-fit, 1/2" overlap design and use four #10-24 stainless steel pan head screws with four aluminum nutserts providing a mechanical lock and enabling easy future replacement of either the roof or bottom globe section if required.

C: Roof is 0.060" thick spun aluminum. 12" height and 17" width. The roof and bottom globe sections are secured in a slip-fit, 1/2" overlap design and use four #10-24 stainless steel pan head screws with four aluminum nutserts providing a mechanical lock and enabling easy future replacement of either the roof or bottom globe section if required.

D: Roof is 0.090" thick spun aluminum. 8-1/2" height and 16-1/2" width. The roof and bottom globe sections are secured in a slip-fit, 1/2" overlap design and use four #10-24 stainless steel pan head screws with four aluminum nutserts providing a mechanical lock and enabling easy future replacement of either the roof or bottom globe section if required.

G: Roof is 0.080" thick spun aluminum. 10-1/2" height and 16-3/4" width. The roof and bottom globe sections are secured in a slip-fit, 1/2" overlap design and use four #10-24 stainless steel pan head screws with four aluminum nutserts providing a mechanical lock and enabling easy future replacement of either the roof or bottom globe section if required.

Top Reflector

Aluminum top reflector decreases uplight, also redirects more light downward.

Cages and Bands

B: Cage for Wide body globes (16-1/2" dia.) is constructed of die-cast 360 aluminum alloy, low copper for high resistance to corrosion. Cage has 4 legs each with square decorative flower block. Solid rectangular band around top of cage. Height of cage is 15" and width of cage is 20". Finish is polyester thermoset powdercoat. (NOTE : Cannot be used with "A" Pod.)

E: Band for Wide body globes (16-1/2" dia.) is architectural slotted aluminum. Supported at 4 points by cast aluminum square flower blocks

F: Band for Wide body globes (16-1/2" dia.) is architectural slotted aluminum supported at 4 points by cast aluminum round flower blocks.

G: Cage for Wide body globes (16-1/2" dia.) is constructed of 356 HM High-Strength cast aluminum, low copper for high resistance to corrosion. Arched, decorative legs are welded to form a one-piece unit. Height of cage is 13" and width of cage is 18-1/2". (NOTE : Cannot be used with "A" Pod.)

I: Cage for Wide body globes (16-1/2" dia.) is constructed of 356 HM High-Strength cast aluminum, low copper for high resistance to corrosion. Cage has 2 curved legs. Solid fluted band around top of cage. Height of cage is 14-1/2" and width of cage is 19-3/4. (NOTE: Cannot be used with "A" Pod.)

J: Cage for Wide body globes (16-1/2" dia.) is constructed of 356 HM High-Strength cast aluminum, low copper for high resistance to corrosion. Cage has 4 curved legs. Solid fluted band around top of cage. Height of cage is 14-1/2" and width of cage is 19-3/4".. (NOTE : Cannot be used with "A" Pod.).

Finials

All finials are cast aluminum mounted with 1/4-20 stainless steel threaded studs. Standard finial finish will match fixture finish as specified. Finish is thermoset powdercoat. (NOTE : C, D, and E finials are not available with "B" Roof.)

Fasteners

Used to secure post fitter to post tenon and globe to globe holder.

1: Hex Head Bolts: Black cadmium stainless steel.

2: Allen Head Bolts: Black cadmium stainless steel.

Light Engine

Composed of 4 main components: LED Module / Optical System / Heat Sink / Driver. Electrical components are RoHS compliant, IP66 sealed light engine. LEDs tested by ISO 17025-2005 accredited lab in accordance with IESNA LM-80 guidelines, extrapolations in accordance with IESNA TM-21. Metal core board ensures greater heat transfer and longer lifespan.

Entire light engine is an all inclusive assembly that is quickly and easily removable (including quick disconnect) while wearing protective gloves per ANSI C136.37 for retrofitting / upgrading in the field - see instructions for details.

LED Module

Composed of high-performance white LEDs. Color temperature as per ANSI/NEMA bin 3000K nominal (3045K +/- 175K) or 4000K nominal (3985K +/- 275K) CRI 70 min, or 2700K nominal (2725 ±145K) CRI 80 min.

Optical System

Composed of high performance UV stabilized optical grade polymer refractor lenses to achieve desired distribution optimized to get maximum spacing, target lumens and a superior lighting uniformity. System is rated IP66. Performance shall be tested per LM-63, LM-79 and TM-15 (IESNA) certifying its photometric performance.

Wide Optics: Superior performance and light level uniformity for applications where typical pole spacing is approximately six times mounting height of luminaire.

Short Optics: Superior performance and light level uniformity for applications where typical pole spacing is approximately five times mounting height of luminaire. Provides higher illumination levels under pole area, ideal for increased security and applications requiring superior facial recognition.

Type 3 and Type 5 distribution choices available. Note: Distribution can easily be changed in the field, and outer light engines can be easily adjusted (either individually or both) in the field to optimize lighting performance and/or address light trespass - see instructions for details.

Specifications (continued)

All wiring is full copper, with 105C rated insulation. LED modules are secured to heatsinks using #8 stainless steel hardware, guaranteeing construction rigidity and vibration resistance.

Heat sink

Consists of four extruded aluminum heat sinks optimizing the LEDs efficiency and life, clear anodized to Architectural Class II specifications for excellent corrosion resistance and surface finish. Extruded heatsinks meet or exceed tolerances as specified by AEC (Aluminum Extruders Council) standards and have been designed to provide superior surface flatness, ensuring excellent contact between heatsinks and LEDs. Heat sinks optimized for maximum natural convection heat transfer, does not use any cooling device with moving parts (passive cooling only).

Heat sinks are secured using galvanized steel brackets and stainless steel hardware to provide additional corrosion resistance.

Driver

Driver comes standard with 0-10V dimming capability. High power factor of 95%. Electronic driver, operating range 50/60 Hz. Auto adjusting universal voltage input from 120 to 277 VAC or 347 to 480 VAC or 277 to 480VAC rated for both application line to line or line to neutral, Class I, THD of 20% max. Driver operating ambient temperature range is -40F (-40C) to +130F (+55C). Certified in compliance to UL1310 or UL8750 cULus requirement (dry and damp location). The current supplying the LEDs will be reduced by the driver if the driver experiences internal overheating as a protection to the LEDs and the electrical components. Output is protected from short circuits, voltage overload and current overload. Automatic recovery after correction. Standard built in driver surge protection of 2.5kV or 6kV (min). Due to the inrush current that occurs with electronic drivers, recommend using a time-delay or slow blow fuse to avoid unwanted fuse blowing (false tripping) that can occur with normal or fast acting fuses.

Driver enables setting LED drive current to meet your specific total wattage consumption, lumen output and/or efficacy needs – ETO, contact factory.

Integral Control Options

D4ID*: D4i certified DALI driver. Replaces DADJ Dynadimmer or DL DALI driver with same functionality plus next generation extended DALI 2 functionality - contact factory for details.

* This driver option ships with DALI bus power turned on and luminaire information loaded in Memory bank 1 as per ANSI C137.4 (2021). Consult factory for any other driver programming requirement.

S: Field Adjustable Wattage Selector (FAWS), pre set to the highest position, can be easily switched in the field to the required position. This reduces total luminaire wattage consumption and reduces the light level – see the FAWS multiplier chart for more details.

Note: It is not recommended to use FAWS with other dimming or controls; if you do, set the switch to position 10 (maximum output) to enable the other dimming or controls. Switching FAWS to any position other than 10 will disable the other dimming or controls.

Future Proof Photo Controls

R7: Receptacle with 7 pins enabling dimming and additional functionality (to be determined), can be used with a twist lock Interact City node or photoelectric cell or a shorting cap. Will ship with a shorting cap installed - remove shorting cap when you are ready to install your node.

Connected Lighting

Interact City connector node provides the plug and play wireless communications technology to connect your street light to the Interact City lighting management system. With Interact you can remotely manage, monitor and control all city lighting, from roads and streets, to parks and plazas, and bridges from one single system. Connected lighting enables capabilities including, accurate on/ off switching, dimming control, fault reporting and integration with other systems to enable condition based lighting. Interact provides you with a robust and scalable infrastructure to further reduce energy consumption, improve operations, and turn lighting into a connected network for your smart city journey. For more details visit: interact-lighting.com/en-us/application-areas/city.

Surge Protection Options

SP1: Fail-On surge protection device tested in accordance with ANSI/IEEE C62.45 per ANSI/IEEE C62.41.2 Scenario I Category C High Exposure 10kV/10kA waveforms for Line Ground, Line Neutral and Neutral Ground, and in accordance with U.S. DOE (Department of Energy) MSSLC (Municipal Solid State Street Lighting Consortium) model specification for LED roadway luminaires electrical immunity requirements for High Test Level 10kV / 10kA.

SP2: Fail-On 20kV/10kA surge protection device that provides extra protection beyond the SP1 10kV/10kA level.

SP1X: Fail-Off Surge protection device tested in accordance with ANSI/IEEE C62.45 per ANSI/ IEEE C62.41.2 Scenario I Category C High Exposure 10kV/10kA waveforms for Line-Ground, Line-Neutral and Neutral-Ground, and in accordance with DOE MSSLC Model Specification for LED Roadway Luminaires Appendix D Electrical Immunity High test level 10kV/10kA.

SP2X: Fail-Off 20kV/10kA surge protection device that provides extra protection beyond the SP1X 10kV/10kA level.

Specifications (continued)

Scenarios	Pod Photo Control Options	Future Proof Photo Control Options
Scenario 1: Basic Level of Controls only	Choose E, H or R depending on your requirements	Choose None
Scenario 2: Network Control Solutions are being used immediately on this project	Choose None	Choose R7 (will ship with a shorting cap for you to remove and replace with your node)
Scenario 3: You would like the product to be future proof because one day you will use a networked lighting controls system. You also require the use of a basic photo control system now to turn your lights on and off	Choose E, H or R depending on your requirements	Choose R7 (will ship with a shorting cap for you to remove and replace with your node, then move the shorting cap to the pod receptacle R if applicable). If you used a button eye, disconnect the button eye.

Finish

Color in accordance with the AAMA 2603 standard. Application of polyester powder coat paint (4 mils/100 microns) with ± 1 mils / 24 microns of tolerance. The Thermosetting resins provides a discoloration resistant finish in accordance with the ASTM D2244 standard, as well as luster retention in keeping with the ASTM D523 standard and humidity proof.

The standard finishes achieve a minimum scribe rating of 9 per ASTM D1654 after a minimum of 2000 hours salt spray in accordance with testing performed per ASTM B117 standard.

G Verde finish is professionally applied by our artisans on top of base A Black finish creating a vintage, authentically antiqued, gracefully weathered finish.

Other finish colors, RAL colors, marine finishes or coastal finishes available as an ETO – contact factory.

Luminaire Useful Life

Refer to IES files for energy consumption and delivered lumens for each option. Based on ISTMT in situ thermal testing in accordance with UL1598 and UL8750, exclusive Signify System Reliability Tool, Advance driver data and LED manufacturer LM-80/TM-21 data, is expected to reach 100,000+ hours with >L70 lumen maintenance @ 25°C. Luminaire useful life accounts for LED lumen maintenance and all of these additional factors including: LED color shift, LED life, driver life, PCB substrate, solder joints, on/off cycles, burning hours and corrosion. Lifetime statements do not include the use of controls, including networked controllers.

LED products manufacturing standard

The electronic components sensitive to electrostatic discharge (ESD) such as light emitting diodes (LEDs) are assembled in compliance with IEC61340-5-1 and ANSI/ ESD S20.20 standards so as to eliminate ESD events that could decrease the useful life of the product.

Vibration Resistance

Meets the ANSI C136.31-2010 specifications for Normal applications (does not include Cages or Bands), tested by a certified lab over 100,000 cycles in all three axes.

Service Tag

Each individual luminaire is uniquely identifiable, thanks to the Service tag application. With a simple scan of a QR code, placed inside the luminaire, you gain instant access to the luminaire configuration, making installation and maintenance operations faster and easier, no matter what stage of the luminaire's lifetime. Just download the app and register your product right away.

For more details visit: https://www.genlyte.com/en-us/solutions/technologies-and-innovation/service-tag.

Certifications and Compliance

cETLus Listed for Canada and U.S. to the UL 1598 and UL8750 standards, suitable for Wet Locations. The quality systems of the facility where manufactured have been registered by UL to the ISO 9001 series standards. LM80 & LM79 tested. Configurations are DesignLights Consortium qualified, consult DLC QPL Qualified Products List for more details.

Suitable for use in ambients from -40°C (-40°F) to +40°C (+104°F). Luminaire complies with or exceeds the following ANSI C136 standards: .2, .3, .4, .10, .15, .16, .22, .24, .25, .31, .37, .41.

IP Ratings

IP66 rated LED light engine.

IK Ratings

Refractive Globe and A & B clear roofs are IK07 impact resistance rated.

Warranty

5-year limited warranty. Options available for extended warranties – contact factory.

See https://www.genlyte.com/en-us/support/warranties for details and restrictions.

NEMA Label

ANSI C136.15 compliant label available as an ETO – contact factory including which version / year is required.

Buy American Act of 1933 (BAA)

This product is manufactured in one of our US factories and, as of the date of this document, this product was considered a commercially available off-the-shelf (COTS) item meeting the requirements of the BAA.

This BAA designation hereunder does not address (i) the applicability of, or availability of a waiver under, the Trade Agreements Act, or (ii) the "Buy America" domestic content requirements imposed on states, localities, and other non-federal entities as a condition of receiving funds administered by the Department of Transportation or other federal agencies. Prior to ordering, please visit https://www.genlyte.com/en-us/resources/programs/domestic-preference to view a current list of BAA-compliant products to confirm this product's current compliance.

Build America, Buy America Act (BABA)

BABA establishes the minimum domestic content requirements that federal agencies must apply. This product is manufactured in the US and has a domestic content of 55% or more. This BABA designation does not address the "Buy America" domestic content requirements, which may be stricter, imposed on states, localities, and other non-federal entities as a condition of receiving funds administered by federal agencies. Please visit https://www.genlyte.com/en-us/resources/programs/domestic-preference.

Prior to ordering, please contact factory to confirm BABA or BABAF compliant configurations (BABAF for projects funded through FHWA must be funded by October 1, 2026), and please submit completed BABA checklist SGn-2452BN-Compliance-Certification-checklist.pdf.

© 2026 Signify Holding. All rights reserved. The information provided herein is subject to change, without notice. Signify does not give any representation or warranty as to the accuracy or completeness of the information included herein and shall not be liable for any action in reliance thereon. The information presented in this document is not intended as any commercial offer and does not form part of any quotation or contract, unless otherwise agreed by Signify.

GENLYTE SOLUTIONS
a signify business

Signify North America Corp.
400 Crossing Blvd, Suite 600
Bridgewater, NJ 08807
Telephone: 800-555-0050

Signify Canada Ltd.
281 Hillmount Road,
Markham, ON, Canada L6C 2S3
Telephone: 800-668-9008

All trademarks are owned by Signify Holding or their respective owners.