HADCO

Urban

Victorian

VL71 Post top, small



Project:

Location:

Cat.No:

Type:

Lamps: Qty:

Notes:

The Hadco Victorian LED post top with EcoSwap is a traditionally styled luminaire with a highly efficient LED light engine inside. This modern engine provides energy efficiency without sacrificing lumens for much needed safety along walkways in cities and neighborhoods. Allows for lower maintenance due to a longer life and fewer internal parts. This makes the VL71 with EcoSwap a fiscally economical choice for communities on a budget.

Ordering guide

Example: VL71-42-G2-A-3-E-740-A-3

Series	LED's	Generation	Finish	Optics	Photo control	CCT	Voltage	Drive current
VL71	42	G2					A	
VL71 Victorian (small)	**42** 42 LEDs	**G2** Gen 2	**A** Black **B** White **G** Verde **H** Bronze **I** Gray **J** Green	**3** Type III **5** Type V	**E** 120 VAC Button eye **H** 208/240/277 VAC Button eye **N** None	**730** Warm 3000K **740** Neutral 4000K	**A** 120-277 VAC	**3** 333mA **5** 500 mA

Dimensions

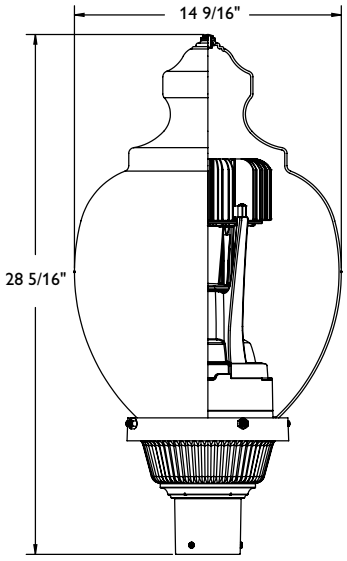

Width: 14" / 36cm diameter

Height: 28" / 71cm

EPA: 0.87 sq. ft (maximum)

Weight: 18 lbs / 8.16 kg (maximum)

BABA BAA

VL71 Victorian

LED Post top, small

Predicted Lumen Depreciation Data

Predicted performance derived from LED manufacturer's data and engineering design estimates, based on IESNA LM-80 methodology. Actual experience may vary due to field application conditions.L_{70} is the predicted time when LED performance depreciates to 70% of initial lumen output. Calculated per IESNA TM21-11. Published L_{70} hours limited to 6 times actual LED test hours.

Ambient Temperature °C	Driver mA	Calculated L_{70} Hours	L_{70} per TM-21	Lumen Maintenance % at 54,000 hrs
25°C	up to 500 mA	>100,000 hrs	>54,000 hrs	87%

LED Wattage and Lumen Values: Victorian VL71

Ordering Code: 3000K	Total LEDs	LED current (mA)	Average System Wattage (W)	Type 3			Type 5		
				Lumen Output	Efficacy (LPW)	BUG Rating	Lumen Output	Efficacy (LPW)	BUG Rating
VL71-42-G2-x-W-3-N	42	333	49	5,234	106	B1-U3-G2	5,214	106	B3-U3-G1
VL71-42-G2-x-W-5-N	42	500	70	6,980	100	B2-U3-G2	6,791	97	B3-U3-G2

Ordering Code: 4000K	Total LEDs	LED current (mA)	Average System Wattage (W)	Type 3			Type 5		
				Lumen Output	Efficacy (LPW)	BUG Rating	Lumen Output	Efficacy (LPW)	BUG Rating
VL71-42-G2-x-N-3-N	42	333	49	5561	113	B2-U3-G2	5964	121	B3-U3-G3
VL71-42-G2-x-N-5-N	42	500	70	7416	106	B1-U3-G2	7769	112	B3-U3-G3

Values from photometric tests performed in accordance with IESNA LM-79 and are representative of the configurations shown. Actual performance may vary due to installation and environmental variables, LED and driver tolerances, and field measurement considerations. It is highly recommended to confirm performance with a photometric layout.

Note: Some data may be scaled based on tests of similar (but not identical) luminaires. Contact factory for configurations not shown.

VL71 Victorian

LED Post top, small

Specifications

Housing

Tall Round fluted fitter is constructed of cast 356 HM high-strength aluminum alloy, low copper for high resistance to corrosion. Optional button eye photocell. Heavy cast aluminum post fitter mounts to 3" O.D. post tenon, slip fitter 3" I.D. x 3" deep. Globe holder has an internal water trap to prevent water from entering driver compartment. All hardware to be stainless steel and captive.

Fasteners

Used to secure post fitter to post tenon (three) and globe to globe holder (four), 5/16-18 black cadmium stainless steel Allen head set screws. Nuts also used on globe bolts.

Globe

U.V. stabilized clear acrylic textured globe.

LED Engine

Composed of 42 high-performance white LEDs. Color temperature as per ANSI/NEMA bin. Neutral White, 4000 Kelvin nominal (3985K +/-.275K or 3710K to 4260K) or Warm white, 3000 Kelvin nominal (3045K +/- 175K or 2870K to 3220K), CRI 70 Min. 75 Typical. Metal core board ensures greater heat transfer and longer lifespan.

Heat Sink

Made of extruded aluminum optimizing the LEDs efficiency and life. Product does not use any cooling device with moving parts (only passive cooling device)

Optical System

Type 3 and Type 5. Composed of high-performance acrylic lenses to achieve optimized distribution and get maximum spacing. Target lumens will create a perfect lighting uniformity. Performance shall be tested per LM-63, LM-79 and TM-15 (IESNA) certifying its photometric performance.

Driver

High power factor of 90%. Electronic driver, operating range 50/60 Hz. Auto-adjusting to a voltage between 120 and 277 volt AC rated for both application line to line or line to neutral, Class II, THD of 20% max. Maximum ambient operating temperature from -40F (-40C) to 130F(55C) degrees. Assembled on a unitized removable tray with Tyco quick disconnect plug resisting to 221F (105C) degrees. Driver comes standard with 0-10V dimming capability. High power factor of 95%. Electronic driver, operating range 50/60 Hz. Auto adjusting universal voltage input from 120 to 277 VAC rated for both application line to line or line to neutral, Class I, THD of 20% max. Driver operating ambient temperature range is -40F (-40C) to +130F (+55C). Certified in compliance to UL1310 cULus requirement (dry and damp location). Assembled on a unitized removable tray with Tyco quick disconnect plug resisting to 221°F (105°C). The current supplying the LEDs will be reduced by the driver if the driver experiences internal overheating as a protection to the LEDs and the electrical components. Output is protected from short circuits, voltage overload and current overload. Automatic recovery after correction. Standard built in driver surge protection of 2.5kV (min).

Surge Protection

Surge protector tested in accordance with ANSI/IEEE C62.45 per ANSI/IEEE C62.41.2 Scenario I Category C High Exposure 10kV/10kA waveforms for Line Ground, Line Neutral and Neutral Ground, and in accordance with U.S. DOE (Department of Energy) MSSLC (Municipal Solid State Street Lighting Consortium) model specification for LED roadway luminaires electrical immunity requirements for High Test Level 10kV / 10kA.

Luminaire Useful Life

Refer to IES files for energy consumption and delivered lumens for each option. Based on ISTMT in situ thermal testing in accordance with UL1598 and UL8750, exclusive Signify System Reliability Tool, Advance driver data and LED manufacturer LM-80/TM-21 data, expected to reach 100,000+ hours with >L70 lumen maintenance @ 25°C luminaire useful life accounts for LED lumen maintenance and all of these additional factors including: LED color shift, LED life, driver life, PCB substrate, solder joints, on/off cycles, burning hours and corrosion.

Hardware

All non-ferrous fasteners prevent corrosion and ensure longer life.

Wiring

18 AWG wire, 6" (152mm) minimum exceeding from luminaire. Due to the inrush current that occurs with electronic drivers, recommend using a time-delay or slow blow fuse to avoid unwanted fuse blowing (false tripping) that can occur with normal or fast acting fuses.

Options

House side shield included for optional field installation.

Finish

Color in accordance with the AAMA 2603 standard. Application of polyester powder coat paint (4 mils/100 microns) with ± 1 mils / 24 microns of tolerance. The Thermosetting resins provides a discoloration resistant finish in accordance with the ASTM D2244 standard, as well as luster retention in keeping with the ASTM D523 standard and humidity proof in accordance with the ASTM D2247 standard. The surface treatment achieves a minimum of 2000 hours for salt spray resistant finish in accordance with testing performed and per ASTM B117 standard.

LED products manufacturing standard

The electronic components sensitive to electrostatic discharge (ESD) such as light emitting diodes (LEDs) are assembled in compliance with IEC61340-5-1 and ANSI/ESD S20.20 standards so as to eliminate ESD events that could decrease the useful life of the product.

Quality Control

The manufacturer must provide a written confirmation of its ISO 9001 2008 and ISO 14001 2004 International Quality Standards Certification.

VL71 Victorian

LED Post top, small

Specification (continued)

Vibration Resistance

Meets the ANSI C136.31-2001, American National Standard for Roadway Luminaire Vibration specifications for Normal applications, tested by a certified lab over 100,000 cycles in all three axes.

Service Tag

Each individual luminaire is uniquely identifiable, thanks to the Service tag application. With a simple scan of a QR code, placed inside the luminaire, you gain instant access to the luminaire configuration, making installation and maintenance operations faster and easier, no matter what stage of the luminaire's lifetime. Just download the app and register your product right away.

For more details visit: https://www.genlyte.com/en-us/solutions/technologies-and-innovation/service-tag

Certifications and Compliance

cETLus Listed for Canada and U.S. to the UL 1598 and UL8750 standards, suitable for Wet Locations. The quality systems of the facility where manufactured have been registered by UL to the ISO 9001 series standards. LM80 & LM79 tested.

Warranty

5-year limited warranty. Options available for extended warranties – contact factory. See https://www.genlyte.com/en-us/support/warranties for details and restrictions.

Buy American Act of 1933 (BAA)

This product is manufactured in one of our US factories and, as of the date of this document, this product was considered a commercially available off-the-shelf (COTS) item meeting the requirements of the BAA.

This BAA designation hereunder does not address (i) the applicability of, or availability of a waiver under, the Trade Agreements Act, or (ii) the "Buy America" domestic content requirements imposed on states, localities, and other non-federal entities as a condition of receiving funds administered by the Department of Transportation or other federal agencies. Prior to ordering, please visit https://www.genlyte.com/en-us/resources/programs/domestic-preference to view a current list of BAA-compliant products to confirm this product's current compliance.

Build America, Buy America Act (BABA)

BABA establishes the minimum domestic content requirements that federal agencies must apply. This product is manufactured in the US and has a domestic content of 55% or more. This BABA designation does not address the "Buy America" domestic content requirements, which may be stricter, imposed on states, localities, and other non-federal entities as a condition of receiving funds administered by federal agencies. Please visit https://www.genlyte.com/en-us/resources/programs/domestic-preference.

Prior to ordering, please contact factory to confirm BABA or BABAF compliant configurations (BABAF for projects funded through FHWA must be funded by October 1, 2026), and please submit completed BABA checklist SGn-2452BN-Compliance-Certification-checklist.pdf.

© 2026 Signify Holding. All rights reserved. The information provided herein is subject to change, without notice. Signify does not give any representation or warranty as to the accuracy or completeness of the information included herein and shall not be liable for any action in reliance thereon. The information presented in this document is not intended as any commercial offer and does not form part of any quotation or contract, unless otherwise agreed by Signify.

GENLYTE SOLUTIONS
a signify business

Signify North America Corp.
400 Crossing Blvd, Suite 600
Bridgewater, NJ 08807
Telephone: 800-555-0050

Signify Canada Ltd.
281 Hillmount Road,
Markham, ON, Canada L6C 2S3
Telephone: 800-668-9008

All trademarks are owned by Signify Holding or their respective owners.