HADCO

Urban

Victorian

V72 Post top, large



Project:

Location:

Cat.No:

Type:

Lumens: Qty:

Notes:

Hadco Victorian V72 LED post top is a traditionally styled luminaire with a highly efficient LED lamp inside. This LED lamp provides energy efficiency without sacrificing lumens for much needed safety along walkways in cities and neighborhoods. It also allows for lower maintenance due to a longer life and fewer internal parts. Powered by TrueForce LED lamp, V72 is a fiscally economical choice for communities on a budget. TrueForce LED lamp is shipped with the luminaire.

Ordering guide

Example: V72-A-T0-N-G-26L730-F

Series	Finish	Optics	Photo control	Socket	Wattage	Voltage
V72 Victorian large	**A** Black **B** White **G** Verde **H** Bronze **I** Gray **J** Green	**T0** Clear **T0C** Visual comfort	**N** None **B** Button eye	**D** Medium **G** Mogul	**26L730** [1] **26L740** [1] **35L730** [2] **35L740** [2] **55L730** [2] **55L740** [2]	**E** 120V **F** 208 V **G** 240V **H** 277V

1. Only available with medium (D) socket
2. Only available with mogul (G) socket

Dimensions

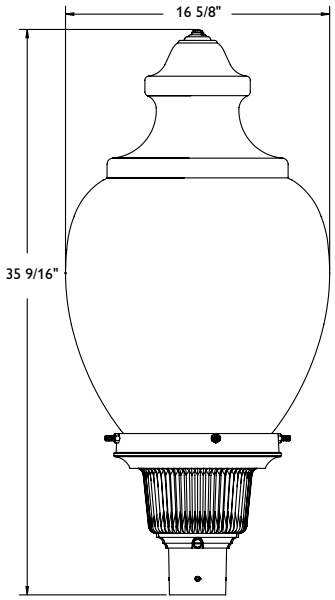

Width: 16-5/8" / 42cm diameter

Height: 35-9/16" / 90cm

EPA: 1.17 sq. ft (maximum)

Weight: 32 lbs / 14.52 kg (maximum)

BABA BAA

V72 Victorian

Post top, large

LED Wattage and Lumen Values: Victorian V72

Clear Textured Globe 3000K		Lamp		
Ordering Code:	Average System Wattage (W)	Delivered Lumens	Efficacy (LPW)	BUG Rating
T0-26L730	26W	2887	112	B1-U5-G2
T0-35L730	35W	4665	137	B1-U5-G3
T0-55L730	55W	7343	140	B2-U5-G4

Visual Comfort Globe 3000K		Lamp		
Ordering Code:	Average System Wattage (W)	Delivered Lumens	Efficacy (LPW)	BUG Rating
T0C-26L730	26W	2894	113	B1-U5-G3
T0C-35L730	35W	4677	139	B1-U5-G3
T0C-55L730	55W	7362	141	B2-U5-G4

Clear Textured Globe 4000K		Lamp		
Ordering Code:	Average System Wattage (W)	Delivered Lumens	Efficacy (LPW)	BUG Rating
T0-26L740	26W	3101	126	B1-U5-G2
T0-35L740	35W	4665	136	B1-U5-G3
T0-55L740	55W	7885	152	B2-U5-G4

Visual Comfort Globe 4000K		Lamp		
Ordering Code:	Average System Wattage (W)	Delivered Lumens	Efficacy (LPW)	BUG Rating
T0C-26L740	26W	3109	126	B1-U5-G2
T0C-35L740	35W	4677	137	B1-U5-G3
T0C-55L740	55W	7905	153	B2-U5-G4

Values from photometric tests performed in accordance with IESNA LM-79 and are representative of the configurations shown. Actual performance may vary due to installation and environmental variables, LED and driver tolerances, and field measurement considerations. It is highly recommended to confirm performance with a photometric layout.

NOTE: Some data may be scaled based on tests of similar (but not identical) luminaires. Contact factory for configurations not shown.

Specifications:

Housing

360 low-copper die-cast aluminum alloy. Fitter: Slip Fitter Dimensions: 3" I.D. x 3" deep.

LED Lamp

Lamp included. Medium or Mogul Base socket lamp, composed of high-performance white LEDs. Color temperature, 3000 or 4000 Kelvin, CRI 70 Nominal. Power factor of 90% minimum Electronic driver, operating range 50/60 Hz. Auto-adjusting universal voltage input from 120 to 277 VAC Maximum ambient operating temperature from -40F(-40C) to 130F(55C)

Luminaire Useful Life

50,000 hours L70 25C

Hardware

All non-ferrous fasteners prevent corrosion and ensure longer life.

Wiring

18 AWG wire, 6" (152mm) minimum exceeding from luminaire.

Finish

Color in accordance with the AAMA 2603 standard. Application of polyester powder coat paint (4 mils/100 microns) with ± 1 mils / 24 microns of tolerance. The Thermosetting resins provides a discoloration resistant finish in accordance with the ASTM D2244 standard, as well as luster retention in keeping with the ASTM D523 standard and humidity proof in accordance with the ASTM D2247 standard. The surface treatment achieves a minimum of 2000 hours for salt spray resistant finish in accordance with testing performed and per ASTM B117 standard.

LED products manufacturing standard

Electrostatic discharge (ESD) such as light emitting diodes (LEDs) are assembled in compliance with IEC61340 5 1 and ANSI/ ESD S20.20 standards so as to eliminate ESD events that could decrease the useful life of the product.

Quality Control

The manufacturer must provide a written confirmation of its ISO 9001 2008 and ISO 14001 2004 International Quality Standards Certification. Meets the ANSI C136.31 2010, American national Standard for Roadway Luminaire Vibration specifications for Normal Applications.

Certifications and Compliance

cETL listed to Canadian safety standards for wet locations. Manufactured to ISO 9001:2008 Standards. UL8750 and UL1598 compliant. ETL listed to U.S. safety standards for wet locations. cETL listed to Canadian safety standards for wet locations. LM80 & LM79 tested.

Warranty

5-year limited warranty. Options available for extended warranties – contact factory. See https://www.genlyte.com/en-us/support/warranties for details and restrictions.

Buy American Act of 1933 (BAA)

This product is manufactured in one of our US factories and, as of the date of this document, this product was considered a commercially available off-the-shelf (COTS) item meeting the requirements of the BAA.

This BAA designation hereunder does not address (i) the applicability of, or availability of a waiver under, the Trade Agreements Act, or (ii) the "Buy America" domestic content requirements imposed on states, localities, and other non-federal entities as a condition of receiving funds administered by the Department of Transportation or other federal agencies. Prior to ordering, please visit https://www.genlyte.com/en-us/resources/programs/domestic-preference to view a current list of BAA-compliant products to confirm this product's current compliance.

Build America, Buy America Act (BABA)

BABA establishes the minimum domestic content requirements that federal agencies must apply. This product is manufactured in the US and has a domestic content of 55% or more. This BABA designation does not address the "Buy America" domestic content requirements, which may be stricter, imposed on states, localities, and other non-federal entities as a condition of receiving funds administered by federal agencies. Please visit https://www.genlyte.com/en-us/resources/programs/domestic-preference.

Prior to ordering, please contact factory to confirm BABA or BABAF compliant configurations (BABAF for projects funded through FHWA must be funded by October 1, 2026), and please submit completed BABA checklist SGn-2452BN-Compliance-Certification-checklist.pdf.

© 2026 Signify Holding. All rights reserved. The information provided herein is subject to change, without notice. Signify does not give any representation or warranty as to the accuracy or completeness of the information included herein and shall not be liable for any action in reliance thereon. The information presented in this document is not intended as any commercial offer and does not form part of any quotation or contract, unless otherwise agreed by Signify.

GENLYTE SOLUTIONS
a signify business

Signify North America Corp.
400 Crossing Blvd, Suite 600
Bridgewater, NJ 08807
Telephone: 800-555-0050

Signify Canada Ltd.
281 Hillmount Road,
Markham, ON, Canada L6C 2S3
Telephone: 800-668-9008

All trademarks are owned by Signify Holding or their respective owners.