Urban

Manor

5534 Post top



Project:

Location:

Cat.No:

Type:

Lumens: Qty:

Notes:

Hadco Manor post top family offers a simple modern take on the traditional lantern, providing style and elegance to downtown areas, commercial developments, parks and residential communities. The Manor offers a range of optical distributions and panel globes to suite any application. Powered by TrueForce LED lamp, Manor provides longevity and energy savings. TrueForce LED lamp is shipped with the luminaire.

Ordering guide

Example: 5534-BLK-B-D-26L730-E-T0-B

Series	Finish	Panel	Socket	Wattage	Voltage	Distribution	Photo control
5534						**T0**	
5534 Manor	**BLK** Black **BRZ** Bronze **FGN** Forest Green **VGN** Verde **WHT** White	**B** Opal Acrylic **Q** Prismatic	**D** Medium **G** Mogul	**26L730** [1] **26L740** [1] **35L730** [2] **35L740** [2] **55L730** [2] **55L740** [2]	**E** 120V **F** 208 V **G** 240V **H** 277V	**T0** Bare Lamp	**B** Button Eye **N** None

1. Only available with medium (D) socket
2. Only available with mogul (G) socket
3. Button eye (B) available in 120V (E) only

Dimensions

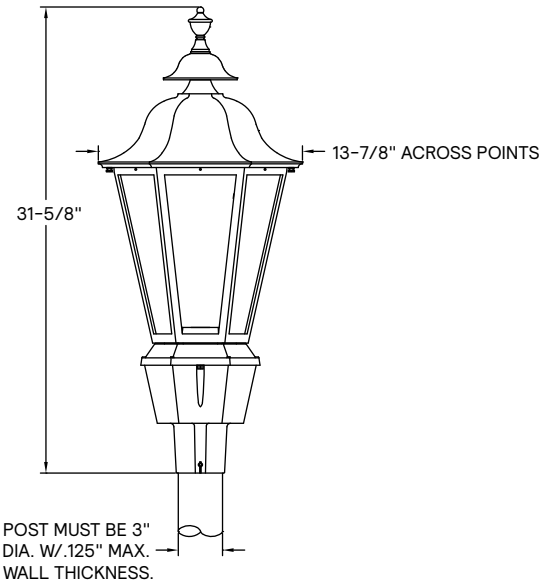

Width: 13-7/8" / 35cm across points

Height: 31-5/8" / 80cm

Fitter: 3" / 8cm I.D.

EPA: 1.3 sq. ft (maximum)

Weight: 23 lbs / 10.43 kg (maximum)

5534 Manor

Post top

LED Wattage and Lumen Values: Manor 5534

Opal Panel 3000K		Lamp		
Ordering Code:	Average System Wattage (W)	Delivered Lumens	Efficacy (LPW)	BUG Rating
B-26L730-T0	26W	1574	61	B1-U3-G1
B-35L730-T0	35W	2503	74	B1-U4-G2
B-55L730-T0	55W	3947	76	B1-U5-G3

Primatic Panel 3000K		Lamp		
Ordering Code:	Average System Wattage (W)	Delivered Lumens	Efficacy (LPW)	BUG Rating
Q-26L730-T0	26W	1753	68	B1-U4-G2
Q-35L730-T0	35W	2788	82	B1-U4-G2
Q-55L730-T0	55W	4396	85	B1-U5-G3

Opal Panel 4000K		Lamp		
Ordering Code:	Average System Wattage (W)	Delivered Lumens	Efficacy (LPW)	BUG Rating
B-26L740-T0	26W	1691	68	B1-U3-G2
B-35L740-T0	35W	2503	73	B1-U4-G2
B-55L740-T0	55W	4238	82	B1-U5-G3

Prismatic Panel 4000K		Lamp		
Ordering Code:	Average System Wattage (W)	Delivered Lumens	Efficacy (LPW)	BUG Rating
Q-26L740-T0	26W	1883	76	B1-U4-G2
Q-35L740-T0	35W	2788	82	B1-U4-G2
Q-55L740-T0	55W	4721	91	B2-U5-G3

Values from photometric tests performed in accordance with IESNA LM-79 and are representative of the configurations shown. Actual performance may vary due to installation and environmental variables, LED and driver tolerances, and field measurement considerations. It is highly recommended to confirm performance with a photometric layout.

NOTE: Some data may be scaled based on tests of similar (but not identical) luminaires. Contact factory for configurations not shown.

Specifications:

Housing

Access Mechanism: Cast aluminum square roof. Five-piece cast aluminum square cage securely welded together to form a one-piece unit. Cast aluminum post fitter slips over 3" O.D. post or tenon.

Panels:

B Opal Acrylic

Q Prismatic

LED lamp

Lamp included. Medium or Mogul Base socket lamp, composed of high-performance white LEDs. Color temperature, 3000 or 4000 Kelvin, CRI 70 Nominal. Power factor of 90% minimum. Electronic driver, operating range 50/60 Hz. Auto-adjusting universal voltage input from 120 to 277 VAC Maximum ambient operating temperature from -40F(-40C) to 130F(55C)

Luminaire Useful Life

50,000 hours L70 25C

Hardware

All non-ferrous fasteners prevent corrosion and ensure longer life.

Wiring

18 AWG wire, 6" (152mm) minimum exceeding from luminaire.

Finish

Color in accordance with the AAMA 2603 standard. Application of polyester powder coat paint (4 mils/100 microns) with ± 1 mils / 24 microns of tolerance. The Thermosetting resins provides a discoloration resistant finish in accordance with the ASTM D2244 standard, as well as luster retention in keeping with the ASTM D523 standard and humidity proof in accordance with the ASTM D2247 standard. The surface treatment achieves a minimum of 2000 hours for salt spray resistant finish in accordance with testing performed and per ASTM B117 standard.

Quality Control

The manufacturer must provide a written confirmation of its ISO 9001 2008 and ISO 14001 2004 International Quality Standards Certification.

Certifications and Compliance

ETL Listed to U.S. safety standards for wet locations. cETL Listed to Canadian safety standards for wet locations.

Warranty

5-year limited warranty. Options available for extended warranties – contact factory. See https://www.genlyte.com/en-us/support/warranties for details and restrictions.

5534 Manor

Post top

Specifications (cont):

Buy American Act of 1933 (BAA)

This product is manufactured in one of our US factories and, as of the date of this document, this product was considered a commercially available off-the-shelf (COTS) item meeting the requirements of the BAA.

This BAA designation hereunder does not address (i) the applicability of, or availability of a waiver under, the Trade Agreements Act, or (ii) the "Buy America" domestic content requirements imposed on states, localities, and other non-federal entities as a condition of receiving funds administered by the Department of Transportation or other federal agencies. Prior to ordering, please visit https://www.genlyte.com/en-us/resources/programs/domestic-preference to view a current list of BAA-compliant products to confirm this product's current compliance.

Build America, Buy America Act (BABA)

BABA establishes the minimum domestic content requirements that federal agencies must apply. This product is manufactured in the US and has a domestic content of 55% or more. This BABA designation does not address the "Buy America" domestic content requirements, which may be stricter, imposed on states, localities, and other non-federal entities as a condition of receiving funds administered by federal agencies. Please visit https://www.genlyte.com/en-us/resources/programs/domestic-preference.

Prior to ordering, please contact factory to confirm BABA or BABAF compliant configurations (BABAF for projects funded through FHWA must be funded by October 1, 2026), and please submit completed BABA checklist SGn-2452BN-Compliance-Certification-checklist.pdf.

© 2026 Signify Holding. All rights reserved. The information provided herein is subject to change, without notice. Signify does not give any representation or warranty as to the accuracy or completeness of the information included herein and shall not be liable for any action in reliance thereon. The information presented in this document is not intended as any commercial offer and does not form part of any quotation or contract, unless otherwise agreed by Signify.

GENLYTE SOLUTIONS
a signify business

Signify North America Corp.
400 Crossing Blvd, Suite 600
Bridgewater, NJ 08807
Telephone: 800-555-0050

Signify Canada Ltd.
281 Hillmount Road,
Markham, ON, Canada L6C 2S3
Telephone: 800-668-9008

All trademarks are owned by Signify Holding or their respective owners.