HADCO

Urban

Post top

UX1 LED Post top



The Hadco LED post top UX1 luminaire offers a simple modern take on the traditional lantern, providing style and elegance to downtown areas, commercial developments, parks and residental communities.

Project:

Location:

Cat.No:

Type:

Lamps: Qty:

Notes:

Ordering guide

Example: UX1-32-G3-C-A-1-2-730-A-3-N-N-N-SP1

Series	LED count	Gen	Lens	Finish	Fastener	Optics
UX1	**32**[1,3] 32 LEDs **48** 48 LEDs **64** 64 LEDs	**G3** Gen 3	**C** Clear Flat Glass **F** Frosted Flat Glass	**A** Black **B** White **G** Verde **H** Bronze **J** Green **I** Gray	**1** Hex Head **2** Allen Head	**2** Type 2 **2H** Type 2 w/HSS **3** Type 3 **3H** Type 3 w/HSS **3W** Type 3 Wide **3WH** Type 3 Wide w/HSS **4** Type 4 **5** Type 5

Color Temp	Voltage	Drive Current	Photo Control	Future-Proof Control Receptacle	Integral Control Options[2]	Surge Protect
730[4] Warm 3000K **740** Neutral 4000K	**A** 120–277 **B**[2,3] 347–480	**3** 350 mA **5** 530 mA **7** 700 mA **1**[1] 1050 mA	**E** 120 VAC button eye **H** 208/240/277 VAC button eye **R** 3-Pin Twist Lock Receptacle **N** None	**N** None **R7** 7-Pin Receptacle	**Dynadimmer** **DA** 4 Hrs, 25% reduction **DB** 4 Hrs, 50% reduction **DC** 4 Hrs, 75% reduction **DD** 6 Hrs, 25% reduction **DE** 6 Hrs, 50% reduction **DF** 6 Hrs, 75% reduction **DG** 8 Hrs, 25% reduction **DH** 8 Hrs, 50% reduction **DJ** 8 Hrs, 75% reduction **DL** DALI **SRD**[2] Sensor ready driver, standard configuration **SRD1**[2] Sensor ready driver, alternate configuration **N** None	**SP1** 10kV/10kA Surge Protector **SP2** 20kV/10kA Surge Protector

1. The 1050mA (1) current is only compatible for 32 LEDs (32) configurations.
2. Configurations with 347–480VAC (B) voltage are not compatible with optional dimming or optional programming.
3. Configurations with 32 LEDs (32) at 350mA (3) and 530mA (5) currents are not compatible with 347–480 VAC (B) voltage.
4. Only 3000K CCT and warmer/below are IDA International DarkSky Approved.

BABA BAA

DARKSKY APPROVED
Reduces light pollution
Certified by DarkSky.org

Intertek

UX1 Post top

LED Post top

LED Wattage and Lumen Values for Clear Globes

Ordering Code	Total LEDs	System current (mA)	Average System Watts (W)	Type 2			Type 3			Type 3W			Type 4			Type 5		
				Lumen Output	BUG Rating	Efficacy (LPW)	Lumen Output	BUG Rating	Efficacy (LPW)	Lumen Output	BUG Rating	Efficacy (LPW)	Lumen Output	BUG Rating	Efficacy (LPW)	Lumen Output	BUG Rating	Efficacy (LPW)
Clear Globe 3000K																		
32-G3-C-x-730-3	32	350	36	3651	B1-U0-G1	102	3427	B1-U0-G1	95	3341	B1-U0-G1	93	3398	B1-U0-G1	95	3341	B2-U0-G1	93
32-G3-C-x-730-5	32	530	53	5236	B1-U0-G1	99	4915	B1-U0-G1	93	4793	B1-U0-G1	91	4874	B1-U0-G1	92	4792	B3-U0-G1	91
32-G3-C-x-730-7	32	700	71	6604	B1-U0-G1	94	6199	B1-U0-G1	88	6045	B1-U0-G2	86	6147	B1-U0-G2	87	6044	B3-U0-G1	86
32-G3-C-x-730-1	32	1050	108	9107	B2-U0-G2	84	8547	B1-U0-G2	79	8335	B2-U0-G2	77	8476	B1-U0-G2	78	8334	B3-U0-G2	77
48-G3-C-x-730-3	48	350	52	5476	B1-U0-G1	105	5140	B1-U0-G1	99	5013	B1-U0-G1	96	5097	B1-U0-G1	98	5011	B3-U0-G1	96
48-G3-C-x-730-5	48	530	79	7855	B2-U0-G1	99	7372	B1-U0-G2	93	7189	B1-U0-G2	91	7310	B1-U0-G2	93	7188	B3-U0-G2	91
48-G3-C-x-730-7	48	700	106	9907	B2-U0-G2	94	9298	B2-U0-G2	88	9067	B2-U0-G2	86	9220	B2-U0-G2	87	9065	B4-U0-G2	86
64-G3-C-x-730-3	64	350	68	6958	B1-U0-G1	102	6753	B1-U0-G1	99	6795	B1-U0-G2	100	6786	B1-U0-G2	100	6920	B3-U0-G2	102
64-G3-C-x-730-5	64	530	105	9981	B2-U0-G2	95	9685	B2-U0-G2	92	9746	B2-U0-G2	92	9733	B2-U0-G2	92	9926	B4-U0-G2	94
64-G3-C-x-730-7	64	700	138	12589	B2-U0-G2	91	12215	B2-U0-G2	89	12291	B2-U0-G2	89	12275	B2-U0-G2	89	12518	B4-U0-G2	91
Clear Globe 4000K																		
32-G3-C-x-740-3	32	350	36	4102	B1-U0-G1	114	3851	B1-U0-G1	107	3754	B1-U0-G1	105	3818	B1-U0-G1	106	3754	B3-U0-G1	105
32-G3-C-x-740-5	32	530	53	5884	B1-U0-G1	112	5522	B1-U0-G1	105	5385	B1-U0-G2	102	5476	B1-U0-G2	104	5385	B3-U0-G1	102
32-G3-C-x-740-7	32	700	71	7421	B1-U0-G1	105	6965	B1-U0-G2	99	6792	B1-U0-G2	96	6906	B1-U0-G2	98	6791	B3-U0-G2	96
32-G3-C-x-740-1	32	1050	108	10232	B2-U0-G2	95	9604	B2-U0-G2	89	9365	B2-U0-G2	87	9524	B2-U0-G2	88	9364	B4-U0-G2	87
48-G3-C-x-740-3	48	350	52	6153	B1-U0-G1	118	5775	B1-U0-G1	111	5631	B1-U0-G2	108	5726	B1-U0-G2	110	5631	B3-U0-G1	108
48-G3-C-x-740-5	48	530	79	8827	B2-U0-G2	112	8284	B1-U0-G2	105	8077	B2-U0-G2	102	8214	B1-U0-G2	104	8076	B3-U0-G2	102
48-G3-C-x-740-7	48	700	106	11132	B2-U0-G2	105	10447	B2-U0-G2	99	10188	B2-U0-G2	96	10359	B2-U0-G2	98	10185	B4-U0-G2	96
64-G3-C-x-740-3	64	350	68	7819	B2-U0-G1	115	7587	B1-U0-G2	111	7634	B1-U0-G2	112	7624	B1-U0-G2	112	7775	B3-U0-G2	114
64-G3-C-x-740-5	64	530	105	11215	B2-U0-G2	106	10883	B2-U0-G2	103	10950	B2-U0-G2	104	10936	B2-U0-G2	104	11153	B4-U0-G2	106
64-G3-C-x-740-7	64	700	138	14144	B2-U0-G2	103	13725	B2-U0-G2	100	13810	B2-U0-G2	100	13792	B2-U0-G2	100	14065	B4-U0-G2	102

LED Wattage and Lumen Values for Frosted Flat Glass

Ordering Code	Total LEDs	System current (mA)	Average System Watts (W)	Type 2			Type 3			Type 3W			Type 4			Type 5		
				Lumen Output	BUG Rating	Efficacy (LPW)	Lumen Output	BUG Rating	Efficacy (LPW)	Lumen Output	BUG Rating	Efficacy (LPW)	Lumen Output	BUG Rating	Efficacy (LPW)	Lumen Output	BUG Rating	Efficacy (LPW)
Clear Globe 3000K																		
32-G3-F-x-730-3	32	350	36	2894	B1-U0-G1	81	2820	B1-U0-G1	79	2691	B1-U0-G1	75	2751	B1-U0-G1	77	2542	B1-U0-G1	71
32-G3-F-x-730-5	32	530	53	4150	B1-U0-G1	79	4045	B1-U0-G1	77	3860	B1-U0-G1	73	3946	B1-U0-G1	75	3646	B2-U0-G1	69
32-G3-F-x-730-7	32	700	71	5235	B2-U0-G1	74	5102	B1-U0-G1	72	4868	B1-U0-G1	69	4977	B1-U0-G1	70	4599	B2-U0-G1	65
32-G3-F-x-730-1	32	1050	108	7219	B2-U0-G2	67	7036	B2-U0-G2	65	6712	B2-U0-G2	62	6863	B2-U0-G1	63	6342	B2-U0-G1	59
48-G3-F-x-730-3	48	350	52	4341	B1-U0-G1	83	4230	B1-U0-G1	81	4036	B1-U0-G1	78	4126	B1-U0-G1	79	3814	B2-U0-G1	73
48-G3-F-x-730-5	48	530	79	6227	B2-U0-G1	79	6068	B2-U0-G1	77	5789	B2-U0-G1	73	5919	B2-U0-G1	75	5470	B2-U0-G1	69
48-G3-F-x-730-7	48	700	106	7852	B2-U0-G2	74	7653	B2-U0-G2	72	7301	B2-U0-G2	69	7465	B2-U0-G2	70	6899	B2-U0-G1	65
64-G3-F-x-730-3	64	350	68	5940	B2-U0-G1	87	5820	B2-U0-G1	85	5702	B2-U0-G1	84	5734	B2-U0-G1	84	5483	B2-U0-G1	81
64-G3-F-x-730-5	64	530	105	8519	B2-U0-G2	81	8348	B2-U0-G2	79	8179	B2-U0-G2	78	8225	B2-U0-G2	78	7864	B3-U0-G1	75
64-G3-F-x-730-7	64	700	138	10745	B2-U0-G2	78	10528	B2-U0-G2	76	10315	B2-U0-G2	75	10372	B2-U0-G2	75	9918	B3-U0-G2	72
Clear Globe 4000K																		
32-G3-F-x-740-3	32	350	36	3251	B1-U0-G1	91	3169	B1-U0-G1	88	3023	B1-U0-G1	84	3091	B1-U0-G1	86	2856	B1-U0-G1	80
32-G3-F-x-740-5	32	530	53	4663	B1-U0-G1	88	4545	B1-U0-G1	86	4336	B1-U0-G1	82	4434	B1-U0-G1	84	4097	B2-U0-G1	78
32-G3-F-x-740-7	32	700	71	5881	B2-U0-G1	83	5733	B2-U0-G1	81	5469	B2-U0-G1	77	5592	B2-U0-G1	79	5168	B2-U0-G1	73
32-G3-F-x-740-1	32	1050	108	8111	B2-U0-G2	75	7904	B2-U0-G2	73	7541	B2-U0-G2	70	7710	B2-U0-G2	71	7126	B2-U0-G1	66
48-G3-F-x-740-3	48	350	52	4877	B1-U0-G1	94	4754	B1-U0-G1	91	4535	B1-U0-G1	87	4637	B1-U0-G1	89	4285	B2-U0-G1	82
48-G3-F-x-740-5	48	530	79	6995	B2-U0-G2	89	6819	B2-U0-G1	86	6505	B2-U0-G2	82	6651	B2-U0-G1	84	6146	B2-U0-G1	78
48-G3-F-x-740-7	48	700	106	8823	B2-U0-G2	83	8599	B2-U0-G2	81	8203	B2-U0-G2	77	8388	B2-U0-G2	79	7751	B3-U0-G1	73
64-G3-F-x-740-3	64	350	68	6674	B2-U0-G1	98	6539	B2-U0-G1	96	6407	B2-U0-G1	94	6443	B2-U0-G1	95	6161	B2-U0-G1	90
64-G3-F-x-740-5	64	530	105	9573	B2-U0-G2	91	9380	B2-U0-G2	89	9190	B2-U0-G2	87	9241	B2-U0-G2	88	8837	B3-U0-G2	84
64-G3-F-x-740-7	64	700	138	12073	B3-U0-G2	88	11830	B2-U0-G2	86	11590	B2-U0-G2	84	11655	B2-U0-G2	85	11144	B3-U0-G2	81

Values from photometric tests performed in accordance with IESNA LM-79 and are representative of the configurations shown. Actual performance may vary due to installation and environmental variables, LED and driver tolerances, and field measurement considerations. It is highly recommended to confirm performance with a photometric layout.

Note: Some data may be scaled based on tests of similar (but not identical) luminaires. Contact factory for configurations not shown.

UX1 Post top

LED Post top

Dimensions

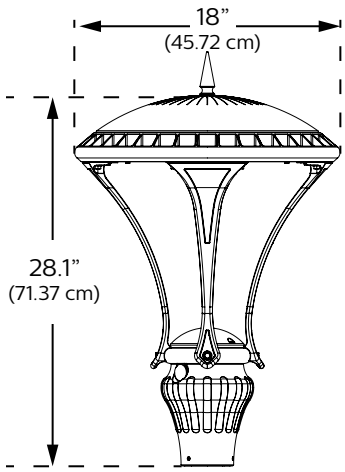

EPA – 0.45 sq. ft.

Weight – 25 lbs

Specifications

Housing

Containing no mercury or other hazardous chemicals, the UX1 is fully recyclable. The housing is constructed of low copper die-cast aluminum and a tool less decorative finial holds down the spun aluminum roof. Concealed aluminum wire way inside of the cage leg is protected from water with a high temperature silicone rubber grommet.

Roof: designed to allow natural run off of water, dirt and debris. Stainless steel screen keeps large insects out and allows for natural water run off.

Fitter/Pod: Two captive screws hold down the pod cover. Option for hex head or set screws in the pod. The pod accepts a 3” pole. The OD of pod is 3.5”. Concealed aluminum wire way inside of the cage leg is protected from water with a high temperature silicone rubber grommet.

Light Engine

LEDgine composed of 5 main components: Heat Sink, Lens, LED lamp, Optical System, and Driver. Electrical components are RoHS compliant.

LED Module

Composed of high-performance white LEDs. Color temperature as per ANSI/NEMA bin - Neutral White, 4000 Kelvin nominal (3985K +/- 275K or 3710K to 4260K) or Warm White, 3000 Kelvin nominal (3045K +/- 175K or 2870K to 3220K), CRI 70 Min. 75 Typical.

Heat sink

Made of cast aluminum optimizing the LEDs efficiency and life. Product does not use any cooling device with moving parts (only passive cooling device).

Optical system

Type 2, 3, 3W, 4 and Type 5 composed of high performance optical grade PMMA acrylic refractor lenses to achieve desired distribution optimized to get maximum spacing, target lumens and a superior lighting uniformity. Optical system is rated IP66. Performance shall be tested per LM 63, LM 79 and TM 15 (IESNA) certifying its photometric performance. Street side indicated.

Lens Options

Option available for clear or frosted tempered flat glass lens (**C** = Clear or **F** = Frosted).

Driver

Driver comes standard with 0-10V dimming capability. High power factor of 95%. Electronic driver, operating range 50/60 Hz. Auto adjusting universal voltage input from 120 to 277 VAC rated for both application line to line or line to neutral, Class I, THD of 20% max. Certified in compliance to UL1012 cULus requirement (dry and damp location). Assembled on a removable cast plate with Tyco quick disconnect plug resisting to 221°F (105°C). The current supplying the LEDs will be reduced by the driver if the driver experiences internal overheating as a protection to the LEDs and the electrical components. Output is protected from short circuits, voltage overload and current overload. Automatic recovery after correction. Standard built in driver surge protection of 2.5kV (min). Due to the inrush current that occurs with electronic drivers, recommend using a time-delay or slow blow fuse to avoid unwanted fuse blowing (false tripping) that can occur with normal or fast acting fuses.

Dimming Options

DA: 4 Hrs 25% Reduction
DB: 4 Hrs 50% Reduction
DC: 4 Hrs 75% Reduction
DD: 6 Hrs 25% Reduction
DE: 6 Hrs 50% Reduction
DF: 6 Hrs 75% Reduction
DG: 8 Hrs 25% Reduction
DH: 8 Hrs 50% Reduction
DJ: 8 Hrs 75% Reduction
DL: DALI Pre-set driver compatible with the DALI logarithmic control system

* Contact factory for DALI options.

Surge Protection

Surge protector tested in accordance with ANSI/IEEE C62.45 per ANSI/IEEE C62.41.2 Scenario I Category C High Exposure 10kV/10kA waveforms for Line Ground, Line Neutral and Neutral Ground, and in accordance with U.S. DOE (Department of Energy) MSSLC (Municipal Solid State Street Lighting Consortium) model specification for LED roadway luminaires electrical immunity requirements for High Test Level 10kV / 10kA. **Optional SP2:** 20kV / 10kA surge protection device that provides extra protection beyond the SP1 10kV/10kA level.

Luminaire Useful Life

Refer to IES files for energy consumption and delivered lumens for each option. Based on ISTMT in situ thermal testing in accordance with UL1598 and UL8750, using LM-80 data from LED manufacturers and engineering prediction methods, the luminaire useful life is expected to reach 100,000+ hours with >L70 lumen maintenance @25C. Luminaire useful life accounts for LED lumen maintenance and all of these additional factors including: LED color shift, LED life, driver life, PCB substrate, solder joints, on/off cycles, burning hours and corrosion. Lifetime statements do not include the use of controls, including networked controllers.

UX1 Post top

LED Post top

Specifications (cont'd)

Hardware

All non-ferrous fasteners prevent corrosion and ensure longer life.

Wiring

18 AWG wire, 6" (152mm) minimum exceeding from luminaire.

Options



HS House side shield

SP2 20kV/20kA integral surge protector (optional)

Finish

Color in accordance with the AAMA 2603 standard. Application of polyester powder coat paint (4 mils/100 microns) with ±1 mils / 24 microns of tolerance. The Thermosetting resins provides a discoloration resistant finish in accordance with the ASTM D2244 standard, as well as luster retention in keeping with the ASTM D523 standard and humidity proof in accordance with the ASTM D2247 standard. The surface treatment achieves a minimum of 2000 hours for salt spray resistant finish in accordance with testing performed and per ASTM B117 standard.

LED products manufacturing standard

The electronic components sensitive to electrostatic discharge (ESD) such as light emitting diodes (LEDs) are assembled in compliance with IEC61340 5 1 and ANSI/ESD S20.20 standards so as to eliminate ESD events that could decrease the useful life of the product.

Quality control

The manufacturer must provide a written confirmation of its ISO 9001 2008 and ISO 14001 2004 International Quality Standards Certification.

Vibration Resistance

Meets the ANSI C136.31 2010, American national Standard for Roadway Luminaire Vibration specifications for Normal Applications.

Certifications and Compliance

cETLus Listed for Canada and U.S. to the UL1598 and UL8750 standards, suitable for Wet Locations. The quality systems of the facility where manufactured have been registered by UL to the ISO 9001 series standards. LM80 & LM79 tested. CCTs 3000K and warmer are Dark Sky Approved.

IP Rating

The LED optics chamber is IP66 rated.

Warranty

5-year limited warranty. Options available for extended warranties – contact factory. See https://www.genlyte.com/en-us/support/warranties for details and restrictions.

Buy American Act of 1933 (BAA)

This product is manufactured in one of our US factories and, as of the date of this document, this product was considered a commercially available off-the-shelf (COTS) item meeting the requirements of the BAA.

This BAA designation hereunder does not address (i) the applicability of, or availability of a waiver under, the Trade Agreements Act, or (ii) the "Buy America" domestic content requirements imposed on states, localities, and other non-federal entities as a condition of receiving funds administered by the Department of Transportation or other federal agencies. Prior to ordering, please visit https://www.genlyte.com/en-us/resources/programs/domestic-preference to view a current list of BAA-compliant products to confirm this product's current compliance.

Build America, Buy America Act (BABA)

BABA establishes the minimum domestic content requirements that federal agencies must apply. This product is manufactured in the US and has a domestic content of 55% or more. This BABA designation does not address the "Buy America" domestic content requirements, which may be stricter, imposed on states, localities, and other non-federal entities as a condition of receiving funds administered by federal agencies. Please visit https://www.genlyte.com/en-us/resources/programs/domestic-preference.

Prior to ordering, please contact factory to confirm BABA or BABAF compliant configurations (BABAF for projects funded through FHWA must be funded by October 1, 2026), and please submit completed BABA checklist SGn-2452BN-Compliance-Certification-checklist.pdf.

LED Performance

Predicted lumen depreciation data				
Ambient Temperature (°C)	Driver mA	Calculated L_{70} hours	L_{70} per TM-21	Lumen Maintenance % @ 60,000 hours
25°C	up to 700 mA	>100,000	>60,000	>92%
25°C	1050 mA	>100,000	>60,000	>89%

Predicted performance derived from LED manufacturer's data and engineering design estimates, based on IESNA LM-80 methodology. Actual experience may vary due to field application conditions.L70 is the predicted time when LED performance depreciates to 70% of initial lumen output. Calculated per IESNA TM21-11. Published L70 hours limited to 6 times actual LED test hours.

© 2026 Signify Holding. All rights reserved. The information provided herein is subject to change, without notice. Signify does not give any representation or warranty as to the accuracy or completeness of the information included herein and shall not be liable for any action in reliance thereon. The information presented in this document is not intended as any commercial offer and does not form part of any quotation or contract, unless otherwise agreed by Signify.

GENLYTE SOLUTIONS
a signify business

Signify North America Corp.
400 Crossing Blvd, Suite 600
Bridgewater, NJ 08807
Telephone: 800-555-0050

Signify Canada Ltd.
281 Hillmount Road,
Markham, ON, Canada L6C 2S3
Telephone: 800-668-9008

All trademarks are owned by Signify Holding or their respective owners.