HADCO

Urban

Pima

CXF5 Pendant



The Hadco Pima pendant family offers a simple modern take on the traditional pendant lantern, providing style and elegance to downtownareas, commercial developments, parks and residential communities. These pendants use the latest LED technology which maximizes energy savings and provides uniform and comfortable light.

Project:

Location:

Cat.No:

Type:

Lamps: Qty:

Notes:

Ordering guide

Example: CXF5-32-G3-T-A-2-730-A-3-N-SP1-N

Series	LEDs	Generation	Mounting	Finish	Optics
CXF5		G3	T		
CXF5 Pima Receptacle 7 pin is available for this luminaire but must be selected with the arm bracket. It is not part of the luminaire code. See bracket ordering guide for coding.	**32**[1] 32 LEDs **48** 48 LEDs **64** 64 LEDs **80** 80 LEDs	**G3** Gen 3	**T** Top arm	**A** Black **B** White **G** Verde **H** Bronze **I** Gray **J** Green	**2** Type 2 **2H** Type 2 w/HSS **3** Type 3 **3H** Type 3 w/HSS **3W** Type 3 Wide **3WH** Type 3 Wide w/HSS **4** Type 4 **5** Type 5

CCT	Voltage	Drive current	Driver Options	Surge protection
730[3] Warm 3000K **740** Neutral 4000K	**A** 120-277 VAC **B**[1,2] 347-480 VAC	**3** 350mA **5** 530 mA **7** 700mA	**DA** 4 Hrs 25% Reduction **DB** 4 Hrs 50% Reduction **DC** 4 Hrs 75% Reduction **DD** 6 Hrs 25% Reduction **DE** 6 Hrs 50% Reduction **DF** 6 Hrs 75% Reduction **DG** 8 Hrs 25% Reduction **DH** 8 Hrs 50% Reduction **DJ** 8 Hrs 75% Reduction **DALI** Compatible with DALI **S** FAWS Filed adjustable wattage slector **SRD**[2] Sensor ready driver, standard configuration **SRD1**[2] Sensor ready driver, alternate configuration **N** No dimming	**SP1** 10kV/20kA **SP2** 20kV/10kV

1. 32 LED at 350mA and 530mA are not compatible with 347-480V.
2. 347-480V not compatible with optional dimming or optional programming.
3. Only 3000K CCT and warmer/below are IDA International DarkSky Approved.

BABA BAA DARKSKY APPROVED Reduces light pollution Certified by DarkSky.org Intertek

CXF5 PIMA

Pendant

Dimensions

Width	24-1/2" diameter
Height	23-3/8"
EPA	1.52 sq. ft
Weight (maximum)	44 lbs (19.96 kg)

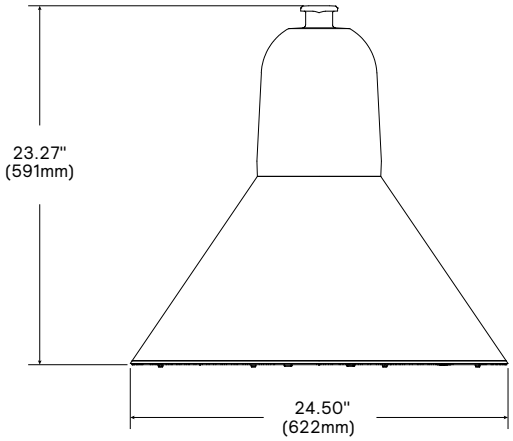

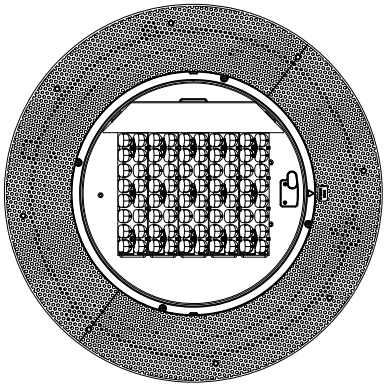

Predicted Lumen Depreciation Data

Predicted performance derived from LED manufacturer's data and engineering design estimates, based on IESNA LM-80 methodology. Actual experience may vary due to field application conditions.L_{70} is the predicted time when LED performance depreciates to 70% of initial lumen output. Calculated per IESNA TM21-11. Published L_{70} hours limited to 6 times actual LED test hours.

Ambient Temperature °C	Driver mA	Calculated L_{70} Hours	L_{70} per TM-21	Lumen Maintenance % at 60,000 hrs
25°C	700 mA	>100,000 hours	>60,000 hours	>87%

Field Adjustable Wattage (FAWS) Multiplier Chart

FAWS Position	Typical Delivered Lumens Multiplier	Typical System Wattage
1	0.31	0.28
2	0.53	0.50
3	0.62	0.58
4	0.70	0.67
5	0.78	0.75
6	0.83	0.81
7	0.89	0.87
8	0.92	0.91
9	0.96	0.95
10	1.00	1.00

Note: Typical value accuracy +/- 5%

CXF5 PIMA

Pendant

LED Wattage and Lumen Values: Pima CXF5

LED Module: 3000K				Type 2			Type 3			Type 3W			Type 4			Type 5		
Ordering Code	LED qty	LED Current (mA)	Avg. System Wattage	Delivered Lumens	BUG Rating	Efficacy (LPW)	Delivered Lumens	BUG Rating	Efficacy (LPW)	Delivered Lumens	BUG Rating	Efficacy (LPW)	Delivered Lumens	BUG Rating	Efficacy (LPW)	Delivered Lumens	BUG Rating	Efficacy (LPW)
32-G3-x-730-3	32	350	35	4715	B1-U0-G1	134	4601	B1-U0-G1	131	4521	B1-U0-G1	128	4650	B1-U0-G1	132	4516	B3-U0-G1	128
32-G3-x-730-5	32	530	51	6750	B2-U0-G1	132	6587	B1-U0-G1	129	6473	B1-U0-G2	126	6657	B1-U0-G2	130	6465	B3-U0-G1	126
32-G3-x-730-7	32	700	71	8405	B2-U0-G1	119	8203	B2-U0-G2	116	8061	B2-U0-G2	114	8290	B2-U0-G2	118	8051	B3-U0-G2	114
48-G3-x-730-3	48	350	54	6870	B2-U0-G1	127	6705	B1-U0-G1	124	6589	B1-U0-G2	122	6776	B1-U0-G2	125	6580	B3-U0-G1	122
48-G3-x-730-5	48	530	80	9836	B2-U0-G2	123	9599	B2-U0-G2	120	9433	B2-U0-G2	118	9701	B2-U0-G2	121	9421	B3-U0-G2	118
48-G3-x-730-7	48	700	105	12249	B3-U0-G2	117	11954	B2-U0-G2	114	11747	B2-U0-G2	112	12081	B2-U0-G2	115	11732	B4-U0-G2	112
64-G3-x-730-3	64	350	68	7602	B2-U0-G1	112	7418	B2-U0-G1	109	7290	B1-U0-G2	107	7497	B2-U0-G2	110	7281	B3-U0-G2	107
64-G3-x-730-5	64	530	99	10882	B2-U0-G2	110	10620	B2-U0-G2	107	10437	B2-U0-G2	105	10733	B2-U0-G2	108	10423	B4-U0-G2	105
64-G3-x-730-7	64	700	114	13552	B3-U0-G2	119	13226	B2-U0-G2	116	12997	B2-U0-G2	114	13367	B2-U0-G2	117	12980	B4-U0-G2	114
80-G3-x-730-3	80	350	87	10695	B2-U0-G2	123	10438	B2-U0-G2	120	10257	B2-U0-G2	118	10549	B2-U0-G2	121	10244	B4-U0-G2	118
80-G3-x-730-5	80	530	126	15312	B3-U0-G2	121	14943	B3-U0-G2	118	14684	B2-U0-G2	116	15102	B3-U0-G2	120	14665	B4-U0-G2	116
80-G3-x-730-7	80	700	168	19068	B3-U0-G2	113	18609	B3-U0-G2	111	18287	B3-U0-G3	109	18807	B3-U0-G3	112	18263	B4-U0-G2	109

LED Module: 4000K				Type 2			Type 3			Type 3W			Type 4			Type 5		
Ordering Code	LED qty	LED Current (mA)	Avg. System Wattage	Delivered Lumens	BUG Rating	Efficacy (LPW)	Delivered Lumens	BUG Rating	Efficacy (LPW)	Delivered Lumens	BUG Rating	Efficacy (LPW)	Delivered Lumens	BUG Rating	Efficacy (LPW)	Delivered Lumens	BUG Rating	Efficacy (LPW)
32-G3-x-740-3	32	350	35	4950	B1-U0-G1	141	4831	B1-U0-G1	137	4747	B1-U0-G1	135	4882	B1-U0-G1	139	4741	B3-U0-G1	135
32-G3-x-740-5	32	530	51	7087	B2-U0-G1	138	6916	B1-U0-G1	135	6797	B1-U0-G2	133	6990	B1-U0-G2	137	6788	B3-U0-G1	133
32-G3-x-740-7	32	700	71	8826	B2-U0-G1	125	8613	B2-U0-G2	122	8464	B2-U0-G2	120	8705	B2-U0-G2	123	8453	B3-U0-G2	120
48-G3-x-740-3	48	350	54	7214	B2-U0-G1	134	7040	B2-U0-G1	130	6918	B1-U0-G2	128	7115	B1-U0-G2	132	6910	B3-U0-G1	128
48-G3-x-740-5	48	530	80	10328	B2-U0-G2	129	10079	B2-U0-G2	126	9904	B2-U0-G2	124	10186	B2-U0-G2	127	9892	B4-U0-G2	124
48-G3-x-740-7	48	700	105	12861	B3-U0-G2	122	12552	B2-U0-G2	120	12334	B2-U0-G2	117	12685	B2-U0-G2	121	12319	B4-U0-G2	117
64-G3-x-740-3	64	350	68	7982	B2-U0-G1	117	7789	B2-U0-G2	114	7655	B1-U0-G2	112	7872	B2-U0-G2	116	7645	B3-U0-G2	112
64-G3-x-740-5	64	530	99	11427	B3-U0-G2	115	11151	B2-U0-G2	112	10958	B2-U0-G2	111	11270	B2-U0-G2	114	10944	B4-U0-G2	110
64-G3-x-740-7	64	700	114	14230	B3-U0-G2	125	13887	B3-U0-G2	122	13647	B2-U0-G2	120	14035	B2-U0-G2	123	13629	B4-U0-G2	120
80-G3-x-740-3	80	350	87	11230	B3-U0-G2	129	10960	B2-U0-G2	126	10770	B2-U0-G2	124	11076	B2-U0-G2	127	10756	B4-U0-G2	123
80-G3-x-740-5	80	530	126	16077	B3-U0-G2	127	15690	B3-U0-G2	124	15418	B2-U0-G2	122	15857	B3-U0-G2	126	15399	B4-U0-G2	122
80-G3-x-740-7	80	700	168	20022	B3-U0-G2	119	19539	B3-U0-G2	116	19201	B3-U0-G3	114	19747	B3-U0-G3	117	19177	B4-U0-G2	114

Values from photometric tests performed in accordance with IESNA LM-79 and are representative of the configurations shown. Actual performance may vary due to installation and environmental variables, LED and driver tolerances, and field measurement considerations. It is highly recommended to confirm performance with a photometric layout.

Note: Some data may be scaled based on tests of similar (but not identical) luminaires. Contact factory for configurations not shown.

CXF5 PIMA

Pendant

Specifications

Housing

In a round shape, this housing is constructed of low copper die-cast aluminum and 0.090" thick spun aluminum. All non-ferrous fasteners prevent corrosion and ensure longer life.

Access-mechanism

The hinged lens frame is cast aluminum with a stainless steel spring latch for tool-less access

Mounting

T: Top arm mount

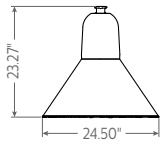

Top arm mount **(T)** - if new installation or as needed = choose one of the Bracket Arm Adapters or one of the Hanging Fixtures Mounting Arms:

Bracket Arm Adapters

- **TFHAM3** horizontal arm clamp collar adapter
- **TFHAM4** horizontal arm clamp collar adapter
- **TFTC1** vertical threaded arm clamp collar adapter (for internally threaded 3/4-14 NPS mating arm, threaded pipe included)

Hanging Fixtures - Hub, Post, or Wall Mounting Arms

Light engine

LEDgine is composed of five main components: **Heat Sink, Lens, LED lamp, Optical System, and Driver.** Electrical components are RoHS compliant.

LED module

LED type Lumileds LUXEON T.Composed of high-performance white LEDs. Color temperature as per ANSI/NEMA bin Neutral White, 4000 Kelvin nominal (3985K +/- 275K or 3710K to 4260K) or Warm White, 3000 Kelvin nominal (3045K +/- 175K or 2870K to 3220K), CRI 70 Min. 75 Typical.

Heat sink

Made of cast aluminum optimizing the LEDs efficiency and life. Product does not use any cooling device with moving parts (only passive cooling device).

Finish

Color in accordance with the AAMA 2603 standard. Application of polyester powder coat paint (4 mils/100 microns) with ± 1 mils / 24 microns of tolerance. The Thermosetting resins provides a discoloration resistant finish in accordance with the ASTM D2244 standard, as well as luster retention in keeping with the ASTM D523 standard and humidity proof in accordance with the ASTM D2247 standard. The surface treatment achieves a minimum of 2000 hours for salt spray resistant finish in accordance with testing performed and per ASTM B117 standard.

Optical system

Composed of high performance UV stabilized optical grade polymer refractor lenses to achieve desired distribution optimized to get maximum spacing, target lumens and a superior lighting uniformity. System is rated IP66. Performance shall be tested per LM-63, LM-79 and TM-15 (IESNA) certifying its photometric performance. Type 2, 3, 3W, 4 and Type 5 Street side indicated. House side shield optional (can be field installed) 2H: Type 2 with House Side Shield, 3H: Type 3 short with house side shield, 3WH: Type 3 Wide with House side shield.

Driver

Driver comes standard with dimming compatible 0-10V. High power factor of 95%. Electronic driver, operating range 50/60 Hz. Auto adjusting universal voltage input from 120 to 277 VAC rated for both application line to line or line to neutral, Class I, THD of 20% max. Maximum ambient operating temperature from 40°F (4°C) to 130°F (55°C). Certified in compliance to UL1310 cULus requirement (dry and damp location). Assembled on a unitized removable tray with Tyco quick disconnect plug resisting to 221°F (105°C). The current supplying the LEDs will be reduced by the driver if the driver experiences internal overheating as a protection to the LEDs and the electrical components. Output is protected from short circuits, voltage overload and current overload. Automatic recovery after correction. Standard built in driver surge protection of 2.5kV (min). Due to the inrush current that occurs with electronic drivers, recommend using a time-delay or slow blow fuse to avoid unwanted fuse blowing (false tripping) that can occur with normal or fast acting fuses.

DA: 4 Hrs 25% Reduction
DB: 4 Hrs 50% Reduction
DC: 4 Hrs 75% Reduction
DD: 6 Hrs 25% Reduction
DE: 6 Hrs 50% Reduction
DF: 6 Hrs 75% Reduction
DG: 8 Hrs 25% Reduction
DH: 8 Hrs 50% Reduction
DJ: 8 Hrs 75% Reduction
DALI: Pre-set driver compatible with the DALI logarithmic control system.

FAWS: Field Adjustable Wattage Selector, pre-set to the highest position, can be easily switched in the field to the required position. This reduces total luminaire wattage consumption and reduces the light level – see the FAWS multiplier chart for more details. **Note:** It is not recommended to use FAWS with other dimming or controls; if you do, set the switch to position 10 (maximum output) to enable the other dimming or controls. Switching FAWS to any position other than 10 will disable the other dimming or controls.

SRD: Sensor Ready Driver including SR communication (used for dimming and other functionalities), 24V auxiliary supply and a logical signal input (LSI) connected to the top NEMA twist lock receptacle.

SRD1: Sensor Ready Driver including SR communication (used for dimming and other functionalities) but with 24V auxiliary supply and a logical signal input (LSI) not connected to the top NEMA twist lock.

Surge protection

Surge protector tested in accordance with ANSI/IEEE C62.45 per ANSI/IEEE C62.41.2 Scenario I Category C High Exposure 10kV/10kA waveforms for Line Ground, Line Neutral and Neutral Ground, and in accordance with U.S. DOE (Department of Energy) MSSLC (Municipal Solid State Street Lighting Consortium) model specification for LED roadway luminaires electrical immunity requirements for High Test Level 10kV / 10kA. Optional SP2: 20kV /10kA surge protection device that provides extra protection beyond the SP1 10kV/10kA level.

Wiring

Gauge 18 wires. Top mount option come with quick disconnects. Arm mount options provide a 6" Minimum exceeding from luminaire.

Hardware

All non-ferrous fasteners prevent corrosion and ensure longer life.

CXF5 PIMA

Pendant

Specifications (cont.)

Luminaire useful life

Refer to IES files for energy consumption and delivered lumens for each option. Based on ISTMT in situ thermal testing in accordance with UL1598 and UL8750, using LM-80 data from LED manufacturers and engineering prediction methods, the luminaire useful life is expected to reach 100,000+ hours with >L70 lumen maintenance @ 25°C. (48 LED and 64 LED@700mA is 82,000). Luminaire useful life accounts for LED lumen maintenance and all of these additional factors including: LED color shift, LED life, driver life, PCB substrate, solder joints, on/off cycles, burning hours and corrosion. Lifetime statements do not include the use of controls, including networked controllers.

LED products manufacturing standard

The electronic components sensitive to electrostatic discharge (ESD) such as light emitting diodes (LEDs) are assembled in compliance with IEC61340 5 1 and ANSI/ ESD S20.20 standards so as to eliminate ESD events that could decrease the useful life of the product

Quality control

The manufacturer must provide a written confirmation of its ISO 9001 2008 and ISO 14001 2004 International Quality Standards Certification.

Vibration resistance

Meets the ANSI C136.31 2001, American National Standard for Roadway Luminaire Vibration specifications for normal Applications.

Certifications and Compliance

cETLus Listed for Canada and U.S. to the UL 1598 and UL8750 standards, suitable for Wet Locations. The quality systems of the facility where manufactured have been registered by UL to the ISO 9001 series standards. LM80 & LM79 tested. CCTs 3000K and warmer are Dark Sky Approved.

IP Rating

The LED optics chamber is IP66 rated.

Warranty

5-year limited warranty. Options available for extended warranties – contact factory. See https://www.genlyte.com/en-us/support/warranties for details and restrictions.

Buy American Act of 1933 (BAA)

This product is manufactured in one of our US factories and, as of the date of this document, this product was considered a commercially available off-the-shelf (COTS) item meeting the requirements of the BAA.

This BAA designation hereunder does not address (i) the applicability of, or availability of a waiver under, the Trade Agreements Act, or (ii) the "Buy America" domestic content requirements imposed on states, localities, and other non-federal entities as a condition of receiving funds administered by the Department of Transportation or other federal agencies. Prior to ordering, please visit https://www.genlyte.com/en-us/resources/programs/domestic-preference to view a current list of BAA-compliant products to confirm this product's current compliance.

Build America, Buy America Act (BABA)

Build America, Buy America Act (BABA)
BABA establishes the minimum domestic content requirements that federal agencies must apply. This product is manufactured in the US and has a domestic content of 55% or more. This BABA designation does not address the "Buy America" domestic content requirements, which may be stricter, imposed on states, localities, and other non-federal entities as a condition of receiving funds administered by federal agencies. Please visit https://www.genlyte.com/en-us/resources/programs/domestic-preference.

Prior to ordering, please contact factory to confirm BABA or BABAF compliant configurations (BABAF for projects funded through FHWA must be funded by October 1, 2026), and please submit completed BABA checklist SGn-2452BN-Compliance-Certification-checklist.pdf.

© 2026 Signify Holding. All rights reserved. The information provided herein is subject to change, without notice. Signify does not give any representation or warranty as to the accuracy or completeness of the information included herein and shall not be liable for any action in reliance thereon. The information presented in this document is not intended as any commercial offer and does not form part of any quotation or contract, unless otherwise agreed by Signify.

GENLYTE SOLUTIONS
a signify business

Signify North America Corp.
400 Crossing Blvd, Suite 600
Bridgewater, NJ 08807
Telephone: 800-555-0050

Signify Canada Ltd.
281 Hillmount Road,
Markham, ON, Canada L6C 2S3
Telephone: 800-668-9008

All trademarks are owned by Signify Holding or their respective owners.