Catalog # : _____ Project : _____ Type : _____

Prepared By : _____ Date : _____

LifeStyle Small (XDLS)

Turtle Friendly Decorative Light



OVERVIEW	
Lumen Package (lm)	1,000
Wattage (W)	27
Efficacy Range (LPW)	36 - 41
Weight lbs (kg)	24 (10.8)

QUICK LINKS

Ordering Guide | Performance | Dimensions

FEATURES & SPECIFICATIONS

Construction

- Cast aluminum. Wiring emerges from crown through compression seal fitting to prevent water entry. One-piece silicone gasket seals crown to shade for water and dust-tight construction.
- Spun aluminum shade. Two shade styles available - A - Angle and B - Bell.
- Brackets are extruded and cast aluminum assemblies or fabrications. All decorative elements are die cast or extruded aluminum.
- Luminaire is proudly made in the U.S.
- Fixtures are finished with LSI's DuraGrip® polyester powder coat finishing process. The DuraGrip finish withstands extreme weather changes without cracking or peeling. Other standard LSI finishes available. Consult factory.
- Shipping weight: 24 lbs in carton.

Optical System

- Low glare mid-powered LEDs available in narrow band amber with peak intensity at 596nm.
- 7 distribution types 2, 3W, 4F, 5Q, 5R, 5D & AD
- Diffused lens version provides maximum visual comfort with reduced brightness and LED pixelization.
- External shielding available for blocking visibility from any side of the luminaire.
- Zero uplight.

Electrical

- High-performance driver features overvoltage, under-voltage, short-circui and over temperature protection (6kV surge standard).
- 0-10V dimming (10% - 100%) Optional.
- Standard Universal Voltage (120-277 VAC) Input 50/60 Hz or optional High Voltage (347-480 VAC).
- Total harmonic distortion (THD): <20%
- Operating temperature: -40°C to +40°C (-40°F to +104°F).
- Power factor (PF): >.90
- Driver is fully encased in potting material for moisture resistance and complies with FCC standards. Driver and key electronic components can easily be accessed.

Controls

- Integral passive infrared Bluetooth™ motion and photocell sensor options. Fixtures operate independently and can be commissioned via an iOS or Android configuration app.
- LSI's AirLink™ Blue lighting control system is a simple feature rich wireless Bluetooth mesh network. The integrated fixture sensor module provides wireless control of grouped fixtures based on motion sensors, daylight or a fully customizable schedule. Updates and modifications to the control strategy are easily implemented via an intuitive iOS app.

Installation

- Classic Hook (CH), Straight Cantilever (SC), and Side Arm (SA - 4" O.D. minimum pole top required) available. See Steel Round Pole and Aluminum Round Pole data sheets for pole selection information.
- Side Arm pole mount requires LSI B3 reduced drilling pattern.
- Classic hook mount requires a 4" O.D. pole or tenon.

Warranty

- LSI luminaires carry a 5-year limited warranty. Refer to https://www.lsicorp.com/resources/terms-conditions-warranty/ for more information.

Listings

- Listed to UL 1598 and UL 8750.
- Suitable for wet Locations.
- US patent 7,828,456 8,002,428, 8,177,386 8,434,893
- Meets Buy American Act requirements.
- DarkSky Approved.
- IP66 rated Luminaire per IEC 60598-1.

©LSI Industries Inc. All Rights Reserved. Specifications and dimensions subject to industry standard tolerances. Specifications subject to change without notice.

LifeStyle Small (XDLS) Turtle Friendly Decorative Light

Type : _____

Have questions? Call us at (800) 436-7800

ORDERING GUIDE

Back to Quick Links

TYPICAL ORDER EXAMPLE: XDLS B 1L 5Q UNV AMT BLK CH S ALBMR1

Prefix	Lumen Package	Distribution	Voltage	CCT/CRI	Finish
XDLSA - LifeStyle Angle Shade[1] **XDLSB** - LifeStyle Bell Shade[1]	**1L** - 1,000 lm, 20w	**2** - Type 2 **3W** - Type 3 Wide **4F** - Type 4 Forward **5Q** - Type 5 Square **5R** - Type 5 Rectangular **5D** - Type 5 Diffuse **AD** - Asymmetric Diffuse	**UNV** - Universal Voltage (120 - 277V) **HV** - High Voltage (347 - 480V)	**AMT** - Narrow Band Amber	**BLK** - Black **BRZ** - Bronze **WHT** - White **GPT** - Graphite **GMG** - Gun Metal Grey **MSV** - Metallic Silver **PLP** - Platinum Plus **SVG** - Satin Verde Green

Mounting Style[2]	Mounting Configuration[2]	Controls
CH - Classic Hook **SC** - Straight Cantilever **SA4** - Side Arm Mount for 4" O.D. Round Poles[3] **SA5** - Side Arm Mount for 5" O.D. Round Poles[3] **SAW** - Side Arm Wall Mount **SCW** - Straight Cantilever Wall Mount	**S** - Single **D180** - Double @ 180° **D90** - Double @ 90°[4] **T90** - Triple @ 90°[4] **TN120** - Triple @ 120°[4] **Q90** - Quad[4]	**Blank** - None **Wireless Controls System** **ALBMR1** - AirLink Blue Wireless Motion & Photo Sensor Controller (8-15' MH) **ALBMR2** - AirLink Blue Wireless Motion & Photo Sensor Controller (16-40' MH) **Stand-Alone Controls** **IMSBT1L** - Integral Bluetooth™ Motion and Photocell Sensor (8 - 24' mounting height)[7] **IMSBT2L** - Integral Bluetooth™ Motion and Photocell Sensor (25 - 40' mounting height)[7] **EXT** - 0-10v Dimming leads extended to housing exterior **PCI120** - 120V ButtonType Photocell **PCI208-277** - 208-277V Button-Type Photocell **PCI347** - 347V ButtonType Photocell

Need more information?
Click here for our glossary

Have additional questions?
Call us at (800) 436-7800

ACCESSORY ORDERING INFORMATION

Part Number	Description
FK120	Single Fusing (120V)[5]
FK277	Single Fusing (277V)[5]
DFK480	Double Fusing (480V)[5]
DFK347	Double Fusing (347V)[5]
828001	XDLS External House Side Shield (Black Finish Only)

Side Arm Mount



Straight Cantilever Mount



Classic Hook Mount



MOTION SENSOR AND PHOTOCELL

Integral button photocell (PCI) available for basic on/off luminaire control based on abmient light levels. Integral BlueTooth motion sensor available for standalone control (IMSBT) or mesh network for grouping multiple fixtures and sensors (ALBCS).

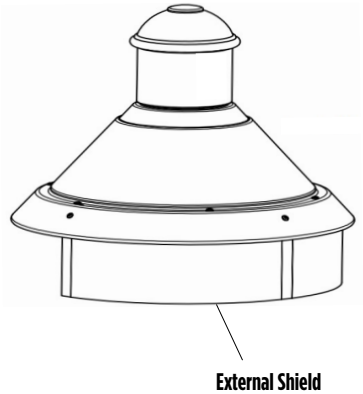



1 When ordering a multiple configuration (D180, etc.) order one fixture/bracket configuration per pole - i.e. order one XDLMB 3 LED SS CW UE BLK CH D180 PCI120 to receive two fixtures and one CH D180 bracket (see drawing on this page). See STEEL ROUND POLES and ALUMINUM ROUND POLES data sheets for pole ordering information.
2 See Lifestyle Bracket ordering chart for Mounting Style/Configurations availability.
3 B3 reduced drilling pattern required.
4 For use with SA4 and SA5 mounting styles only.
5 Fusing must be located in the hand hole of pole.
6 LEDs are frequently updated therefore values are nominal
7 IMSBTxL is field configurable via the Leviton app that can be downloaded from your smartphone's app store.

©LSI Industries Inc. All Rights Reserved. Specifications and dimensions subject to industry standard tolerances. Specifications subject to change without notice.

LifeStyle Small (XDLS) Turtle Friendly Decorative Light

Type : _____

Have questions? Call us at (800) 436-7800

PERFORMANCE

Back to Quick Links

Delivered Lumens					
Lumen Package	Distribution	Narrow Band Amber			Wattage
		Delivered Lumens	Efficacy	Bug Rating	
1L	3W	1034	39	B0-U0-G1	27
	4F	1048	39	B0-U0-G0	
	5Q	1041	39	B1-U0-G0	
	5D	969	36	B1-U0-G0	
	5R	1019	38	B1-U0-G1	
	5C	1083	41	B1-U0-G0	
	AD	975	37	B0-U0-G0	

Electrical Data - Current Draw AMPS[2]							
Lumen Package	Wattage	120V	208V	240V	277V	347V	480V
1L	27	0.22	0.13	0.11	0.10	0.08	0.06

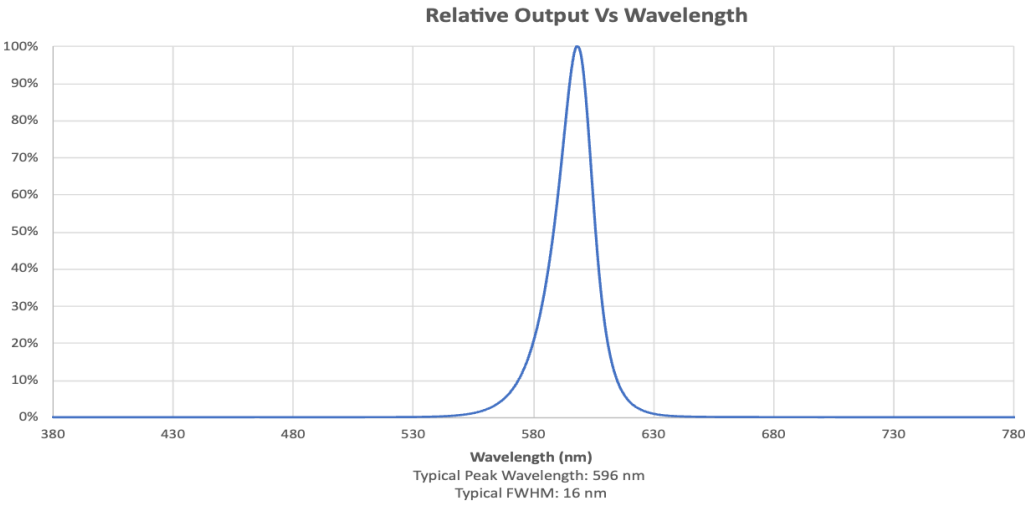

POLES & BRACKETS

Back to Quick Links

LSI offers a full line of poles and mounting accessories to complete your lighting assembly. Aluminum and steel in both square and round shafts. In addition, LSI offers round tapered, fluted and hinge based poles. Designed and engineered for durability and protected with our oven baked DuraGrip Protection System. Also available with our DuraGrip+ Protection system for unmatched corrosion resistance and an extended warranty. American made in our Ohio facility with industry leading lead times.

Click here to learn more details about poles & brackets



Decorative Base Cover
Round Straight

Optional decorative base cover has a two-piece die cast construction with stainless steel fasteners. Base cover is polyester powder coated to match pole. GBC base cover fits 4" and 5" diameter straight round poles. Includes 4" round pole adaptor molded from black silicone rubber.



Spun Aluminum Collar
Round Straight

Optional one-piece spun aluminum collar for 4" or 5" diameter straight round aluminum poles. Features durable, high quality construction with aesthetically pleasing design that slips over the pole for increased theft deterrent.

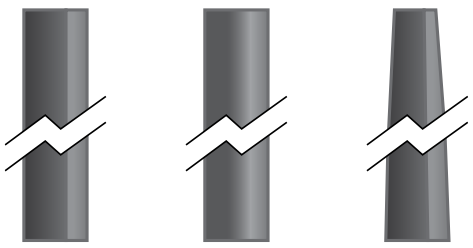

Square Pole
14'-39'

Round Pole
10'-30'

Tapered Pole
20'-39'

©LSI Industries Inc. All Rights Reserved. Specifications and dimensions subject to industry standard tolerances. Specifications subject to change without notice.

LifeStyle Small (XDLS) Turtle Friendly Decorative Light

Type : _____

Have questions? Call us at (800) 436-7800

Classic Hook - Single (XDLSA CH S)

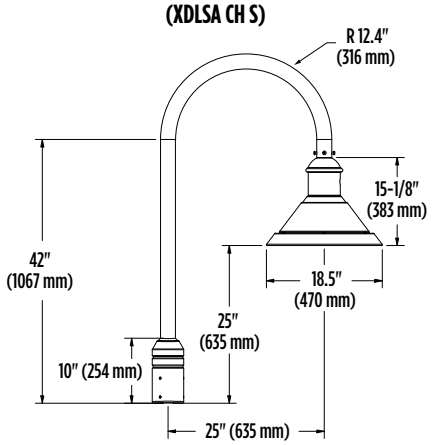

Straight Cantilever - Single (XDLSA SC S)

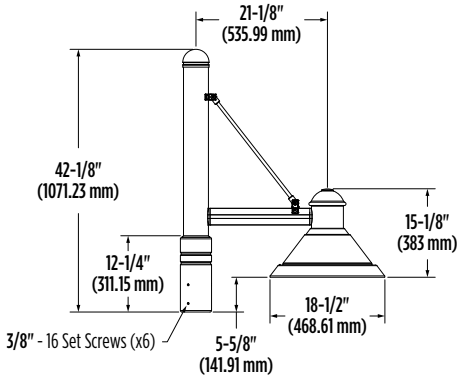

Side Arm Mount for Round Poles - Single (XDLSA SA_S)

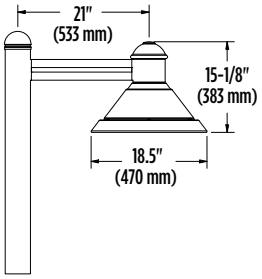

Side Arm Wall Mount (XDLSB SAW)

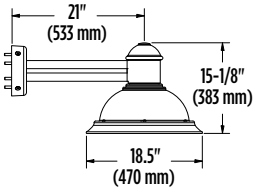

Straight Cantilever Wall Mount (XDLSA SCW)

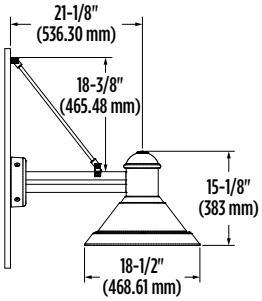

Classic Hook - Double 180°[1] (CHD180)

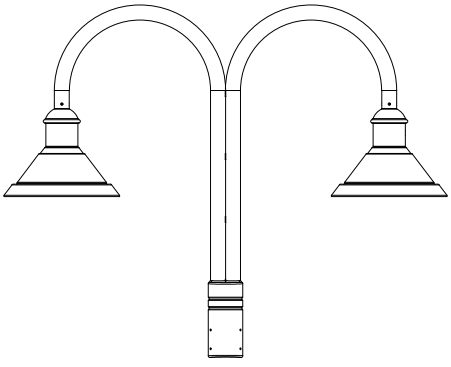

Side Arm Mount - Double 180°[1] (SAD180)

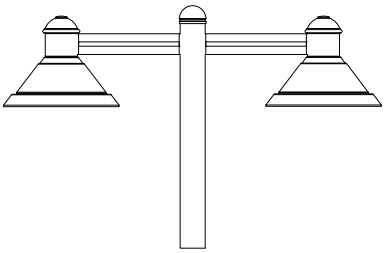

Straight Cantilever Mount - Double 180°[1] (SCD180)

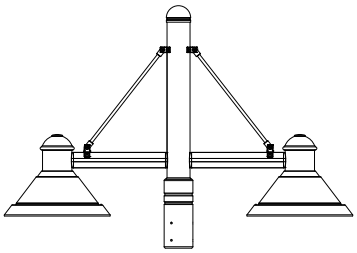

Luminaire EPA Chart - Side Arm XDLS[2]						
Configration	Single	D180°	D90°	T90°	TN120°	Q90°
EPA	1.3	2.6	2.2	3.5	3.3	4.0

Luminaire EPA Chart - Classic Hook XDLS[2]		
Configration	Single	D180°
EPA	2.4	4.7

Luminaire EPA Chart - Straight Cantilever[2]		
Configration	Single	D180°
EPA	2.8	4.3

1 See Lifestyle Brackets and Mounts in outdoor section of latest Buyers Guide for details on other bracket sizes.
2 Includes Bracket.

©LSI Industries Inc. All Rights Reserved. Specifications and dimensions subject to industry standard tolerances. Specifications subject to change without notice.

LifeStyle Small (XDLS) Turtle Friendly Decorative Light

Type : _____

Have questions? Call us at (800) 436-7800

PRODUCT DIMENSIONS

Back to Quick Links

Integral Bluetooth™ Motion and Photocell Sensor (IMSBTx)

Slim low profile sensor provides multi-level control based on motion and/or daylight. Sensor controls 0-10 VDC LED drivers and is IP66 rated for cold and wet locations (-40°F to 167°F). Two unique PIR lenses are available and used based on fixture mounting height. All control parameters are adjustable via an iOS or Android App capable of storing and transmitting sensor profiles.

Click here to learn more details about IMSBT

Apple Android

AirLink Blue (ALBMRx)

Wireless Bluetooth Mesh Outdoor Lighting Control System that provides energy savings, code compliance and enhanced safety/security for parking lots and parking garages. Three key components; Bluetooth wireless radio/sensor controller, Time Keeper and an iOS App. Capable of grouping multiple fixtures and sensors as well as scheduling time-based events by zone. Radio/Sensor Controller is factory integrated into Area/Site, Wall Mounted, Parking Garage and Canopy luminaires.

Click here to learn more details about AirLink Blue

AirLink Blue App Apple

Sensor Sequence of Operations

Standard Programming	On Event	Off Event	On Light Level	Dim Light Level	Daylight Harvesting	Delay To Off	Sensitivity
IMSBTx	Motion	No Motion	100%	N/A	On; Auto Calibration	20 minutes	High

Operation	Description
On Event	Trigger that activates lights to turn on; either automatic via motion detected or manually activated via push of button.
Off Event	Trigger that activates lights to turn off; either automatic via no motion detected or manually activated via push of button.
On Light Level	The light level that the fixtures will turn on to when ON EVENT occurs.
Dim Light Level	The light level that the fixtures will dim down to when no motion is detected.
Delay to Dim	The amount of time after which no motion is detected that the fixtures will be triggered to dim down. This sequence is optional, and sensor can be programmed to only trigger the fixture to turn off by entering 100% in this field.
Delay to Off	The amount of time after which no motion is detected that the fixtures will be triggered to turn off. If delay to dim is part of the programmed functionality, this is the amount of time after which no motion is detected after the fixture have already dimmed down.
Sensitivity	The sensitivity can be set to high, medium, low, or auto where applicable. High will detect smaller, simple motions. Low will only detect larger more complex motions. Auto temperature calibration adjusts the PIR sensitivity as ambient temperature rises to increase detection of heat movement through the field of view.

©LSI Industries Inc. All Rights Reserved. Specifications and dimensions subject to industry standard tolerances. Specifications subject to change without notice.