Catalog # : _____ Project : _____ Type : _____

Prepared By : _____ Date : _____

# Constitution (XCN4)

## Outdoor Decorative Post Top



| OVERVIEW | |
|---|---|
| Lumen Package (lm) | 10,000 - 25,000 |
| Wattage Range (W) | 74 - 231 |
| Efficacy Range (LPW) | 103 - 147 |
| Weight lbs (kg) | 45 (20.4) |

### QUICK LINKS

Ordering Guide | Performance | Photometrics | Dimensions

## FEATURES & SPECIFICATIONS

### Construction

- Rugged die-cast aluminum optical housing, cage, and fitter. Fitter contains factory pre-wired drivers and optional controls.
- Cast aluminum wiring access door located in lower hub/fitter.
- Rigid die-cast aluminum arms for consistency and strength.
- Precision die cast aluminum heatsink and optical frame.
- Removable spun aluminum cap/driver enclosure is retained by captive stainless steel fasteners and safety cables. Housing and top cap interface is sealed with a one-piece extruded silicone gasket. Tool-less entry option is available.
- All exposed fasteners are black oxide coated stainless steel. Internal fasteners are stainless steel or zinc electroplated steel.
- Luminaire is proudly made in the U.S.
- Fixtures are finished with LSI's DuraGrip® polyester powder coat finishing process. The DuraGrip finish withstands extreme weather changes without cracking or peeling. Other standard LSI finishes available. Consult factory.
- Shipping weight: 45 lbs in carton.

### Optical System

- State-of-the-Art one piece silicone optic sheet delivers industry leading optical control with an integrated gasket.
- Proprietary silicone refractor optics provide exceptional coverage and uniformity in IES Types 2, 3, 5W and FT.
- Silicone optical material does not yellow or crack with age and provides a typical light transmittance of 93%.
- Available in 5000K, 4000K, and 3000K color temperatures per ANSI C78.377.
- Minimum CRI of 70
- Integral louver (IL) option available for improved backlight control without sacrificing street side performance.

### Electrical

- High-performance programmable driver features over-voltage, undervoltage, short-circuit and over temperature protection. Custom lumen and wattage packages available.
- 0-10V dimming (10% - 100%) standard.
- Standard Universal Voltage (120-277 Vac) Input 50/60 Hz or optional High Voltage (347-480 Vac).
- L70 Calculated Life: >100k Hours
- Total harmonic distortion: <20%
- Operating temperature: -40°C to +50°C (-40°F to +122°F).
- Power factor: >.90
- Input power stays constant over life.
- Field replaceable surge protection device meets a minimum Category C Low operation (per ANSI/IEEE C62.41.2).
- High-efficacy LEDs mounted to metal-core circuit board to maximize heat dissipation
- Terminal block provided accepts up to 10ga wire, however the luminaire is supplied with a 32' 3 conductor wire harness.
- Components are fully encased in potting material for moisture resistance. Driver complies with FCC standards.
- Internal power supplies and controls can be serviced via (2) integral fitter removable power trays.

### Installation

- Mounts to 4" O.D. pole or tenon.
- Secures to pole with 6 stainless steel set screws.
- 32' wire leads are provided bundled in the slip fitter hub for ease of wiring.

### Warranty

- LSI luminaires carry a 5-year limited warranty. Refer to https://www.lsicorp.com/resources/terms-conditions-warranty/ for more information.

### Listings

- Listed to UL 1598 and UL 8750.
- RoHS Compliant.
- Title 24 Compliant; see local ordinance for qualification information.
- Suitable for wet Locations
- IP65 rated Luminaire per IEC 60598. IP66 rated optical chamber.
- 1.5G rated for ANSI C136.31 high vibration applications.
- DesignLights Consortium® (DLC) qualified product. Not all versions of this product may be DLC qualified. Please check the DLC Qualified Products List at www.designlights.org/QPL to confirm which versions are qualified.
- Buy American Act (BAA) and Build America, Buy America (BABA) Compliant Fixture.
  - Compliance dependent on SKU and configuration. Confirm with factory.


©LSI Industries Inc. All Rights Reserved. Specifications and dimensions subject to industry standard tolerances. Specifications subject to change without notice.

# Constitution (XCN4) Outdoor Decorative Post Top

Type : _____

**Have questions?** Call us at (800) 436-7800

## ORDERING GUIDE

Back to Quick Links

**TYPICAL ORDER EXAMPLE:** XCN4 PT 5W LED 18L 50 UE BLK ALBMR2LR IL

| Prefix | Distribution | Light Source | Lumen Package | Color Temperature | Voltage |
|---|---|---|---|---|---|
| **XCN4 PT -** Constitution Post Top | **2** - Type 2<br>**3** - Type 3<br>**FT** - Type 4 (Forward Throw)<br>**5W** - Type 5W | **LED** | **10L** - 0,000<br>**18L** - 13,000<br>**25L** - 20,000<br>Custom Lumen Packages[1] | **50** - 5000K CCT<br>**40** - 4000K CCT<br>**30** - 3000K CCT | **UNV** - Universal Voltage (120-277V)<br>**HV** - High Voltage (347-480V) |

| Finish | Controls | Options |
|---|---|---|
| **BRZ -** Dark Bronze<br>**BLK -** Black<br>**GMG** - Gun Metal Gray<br>**GPT -** Graphite<br>**MSV -** Metallic Silver<br>**PLP -** Platinum Plus<br>**WHT -** White | **(Blank)** - None<br>**Wireless Controls System**<br>**ALBMR1LR** - AirLink Blue Long Range Wireless Motion & Photo Sensor Controller (8-15' mounting height)[2]<br>**ALBMR2LR** - AirLink Blue Long Range Wireless Motion & Photo Sensor Controller (16-40' mounting height)[2]<br>**Stand-Alone Controls**<br>**CR7P** - 7 Pin Control Receptacle ANSI C136.41[3]<br>**IMSBT1L** - Integral Bluetooth™ Motion and Photocell Sensor (8-24' mounting height)[2]<br>**IMSBT1L** - Integral Bluetooth™ Motion and Photocell Sensor (25-40' mounting height)[2] | **(Blank)** - None<br>**IL** - Integral Louver Shield[4]<br>**TE** - Tooless Access |

**Need more information?**
Click here for our glossary

**Have additional questions?**
Call us at (800) 436-7800

## ACCESSORY ORDERING INFORMATION

| CONTROLS ACCESSORIES [5,6] | |
|---|---|
| **Order Number** | **Description** |
| **122514** | PC120 Photocell for use with CR7P option (120V) [4] |
| **122515** | PC208-277 Photocell for use with CR7P option (208V, 240V, 277V) [4] |
| **159516** | Twist Lock Photocell (347V) for use with CR7P [4] |
| **1225180** | Twist Lock Photocell (480V) for use with CR7P [4] |
| **661410** | AirLink 7 Pin Twist Lock Controller [4] |
| **149328** | Shorting Cap for use with CR7P [4] |

| MOUNTING ACCESSORIES [5,8] | |
|---|---|
| **Order Number** | **Description** |
| **See Fusing Guide** | Single Fusing (120V) |
| | Single Fusing (277V) |
| | Double Fusing (208V,240V) |
| | Double Fusing (347V) |
| | Double Fusing (480V) |

| MOUNTING ACCESSORIES [5] | |
|---|---|
| **Order Number** | **Description** |
| **490025CLR** | BK MPT B04 - Bolt on Bracket (for PT 180) For 4" O.D. Round Poles |
| **490035CLR** | BK MPT B05 - Bolt on Bracket (for PT 180) For 5" O.D. Round Poles |
| **Consult Facotry** | WM - Post Top Wall Mount Bracket |

| SHIELDING ACCESSORIES [4,5] | |
|---|---|
| **Order Number** | **Description** |
| **654939** | IL - Integral Louver (Sharp Spill Light Cutoff) |

1 Custom lumen and wattage packages available, consult factory. Values are within industry standard tolerances but not DLC listed.
2 Motion sensors are field configurable via an app that can be downloaded from your smartphone's native app store. See controls section for more details.
3 Control device or shorting cap must be ordered separately. See Accessory Ordering Information.
4 Not available with 5W distribution.
5 Accessories are shipped separately and field installed.
6 Factory installed CR7P option required. See Options.
7 "CLR" denotes finish. See Finish options.
8 Fusing must be located in hand hole of pole.


©LSI Industries Inc. All Rights Reserved. Specifications and dimensions subject to industry standard tolerances. Specifications subject to change without notice.

# Constitution (XCN4) Outdoor Decorative Post Top

Type : _____

**Have questions?** Call us at (800) 436-7800

## PERFORMANCE

Back to Quick Links

**Delivered Lumens (OPS)***

| Lumen Package | Distribution | CRI | 3000K CCT | | | 4000K CCT | | | 5000K CCT | | | Wattage |
|---|---|---|---|---|---|---|---|---|---|---|---|---|
| | | | Delivered Lumens | Efficacy | BUG Rating | Delivered Lumens | Efficacy | BUG Rating | Delivered Lumens | Efficacy | BUG Rating | |
| 10L | 2 | 70 | 8950 | 119 | B2-U2-G3 | 9706 | 129 | B3-U2-G3 | 10239 | 137 | B3-U2-G3 | 74 |
| | 3 | | 9811 | 131 | B2-U2-G3 | 10640 | 142 | B2-U2-G3 | 10720 | 143 | B2-U2-G3 | |
| | FT | | 10056 | 134 | B3-U2-G3 | 10906 | 145 | B3-U2-G3 | 10853 | 145 | B3-U2-G3 | |
| | 5W | | 9800 | 131 | B4-U2-G2 | 10627 | 142 | B4-U2-G2 | 10714 | 143 | B4-U2-G2 | |
| 18L | 2 | 70 | 16943 | 121 | B3-U2-G3 | 18374 | 131 | B4-U2-G4 | 19383 | 138 | B4-U2-G4 | 149 |
| | 3 | | 18573 | 133 | B3-U2-G3 | 20142 | 144 | B3-U2-G4 | 20294 | 145 | B3-U2-G4 | |
| | FT | | 19037 | 136 | B3-U2-G3 | 20645 | 147 | B3-U2-G4 | 20546 | 147 | B3-U2-G4 | |
| | 5W | | 18551 | 133 | B4-U2-G2 | 20118 | 144 | B4-U2-G2 | 20282 | 145 | B4-U2-G2 | |
| 25L | 2 | 70 | 23947 | 103 | B4-U2-G3 | 25969 | 112 | B4-U2-G3 | 27395 | 118 | B4-U2-G3 | 231 |
| | 3 | | 26250 | 113 | B3-U2-G4 | 28468 | 123 | B3-U2-G4 | 28683 | 124 | B3-U2-G4 | |
| | FT | | 26906 | 116 | B3-U2-G4 | 29179 | 126 | B3-U2-G4 | 29039 | 125 | B3-U2-G4 | |
| | 5W | | 26219 | 113 | B5-U2-G3 | 28434 | 123 | B5-U2-G3 | 28666 | 124 | B5-U2-G4 | |

*LED Chips are frequently updated therefore values may increase.

**Electrical Data (AMPS)***

| Lumens | 120V | 208V | 240V | 277V | 347 | 480V |
|---|---|---|---|---|---|---|
| 10L | 0.62 | 0.36 | 0.31 | 0.27 | 0.21 | 0.15 |
| 15L | 1.24 | 0.72 | 0.62 | 0.54 | 0.43 | 0.31 |
| 25L | 1.93 | 1.11 | 0.96 | 0.83 | 0.67 | 0.48 |

*Electrical data at 25C (77F). Actual wattage may differ by +/-10%.


©LSI Industries Inc. All Rights Reserved. Specifications and dimensions subject to industry standard tolerances. Specifications subject to change without notice.

# Constitution (XCN4) Outdoor Decorative Post Top

Type : _____

**Have questions?** Call us at (800) 436-7800

## PHOTOMETRICS

Back to Quick Links

Luminaire photometry has been conducted by a NVLAP accredited testing laboratory in accordance with IESNA LM-79-08. As specified by IESNA LM-79-08 the entire luminaire is tested as the source resulting in a luminaire efficiency of 100%.

See the individual product page on https://www.lsicorp.com/ for detailed photometric data.

### XCN4 2 PT LED 18L 40

| Luminaire Data | |
|---|---|
| **Type 2 Distribution** | |
| **Description** | 4000 Kelvin, 70 CRI |
| **Delivered Lumens** | 17,929 |
| **Watts** | 155.2 |
| **Efficacy** | 116 |
| **IES Type** | Type II - Medium |
| **BUG Rating** | B3-U2-G3 |

| Zonal Lumen Summary | | |
|---|---|---|
| **Zone** | **Lumens** | **% Luminaire** |
| **Low (0-30°)** | 1966 | 11% |
| **Medium (30-60°)** | 10306 | 57% |
| **High (60-80°)** | 5475 | 31% |
| **Very High (80-90°)** | 141 | 1% |
| **Uplight (90-180°)** | 41 | 0% |
| **Total Flux** | 17929 | 100% |

**ISO Footcandle**

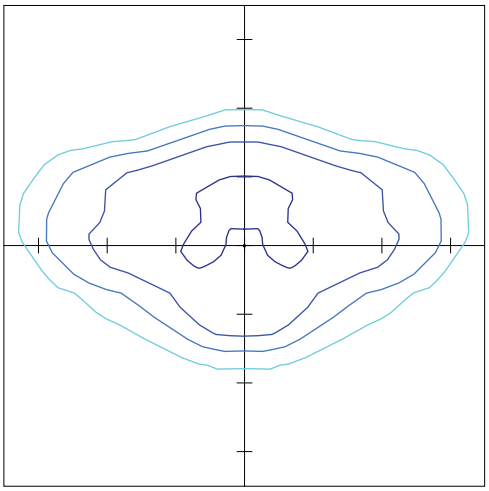

20' Mounting Height / 20' Grid Spacing

5 FC 2 FC 1 FC 0.5 FC

**Polar Curve**

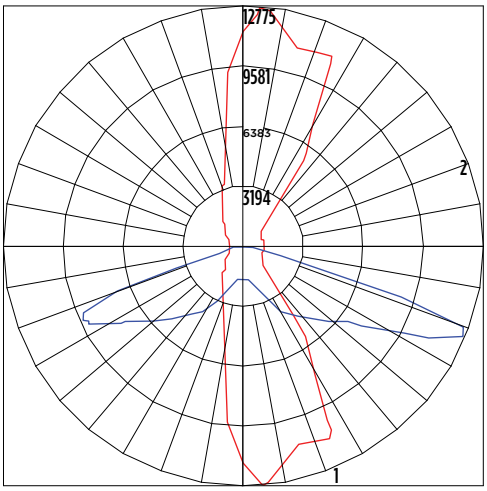


Vertical Plane Horizontal Cone

### XCN4 3 PT LED 18L 40

| Luminaire Data | |
|---|---|
| **ype 3 Distribution** | |
| **Description** | 4000 Kelvin, 70 CRI |
| **Delivered Lumens** | 18,851 |
| **Watts** | 155.2 |
| **Efficacy** | 121 |
| **IES Type** | Type III - Short |
| **BUG Rating** | B3-U2-G3 |

| Zonal Lumen Summary | | |
|---|---|---|
| **Zone** | **Lumens** | **% Luminaire** |
| **Low (0-30°)** | 1396 | 7% |
| **Medium (30-60°)** | 9615 | 51% |
| **High (60-80°)** | 7501 | 40% |
| **Very High (80-90°)** | 284 | 2% |
| **Uplight (90-180°)** | 55 | 0% |
| **Total Flux** | 18851 | 100% |

**ISO Footcandle**

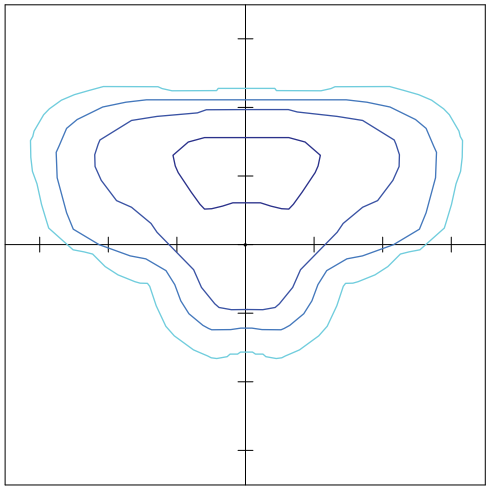

20' Mounting Height / 20' Grid Spacing

5 FC 2 FC 1 FC 0.5 FC

**Polar Curve**

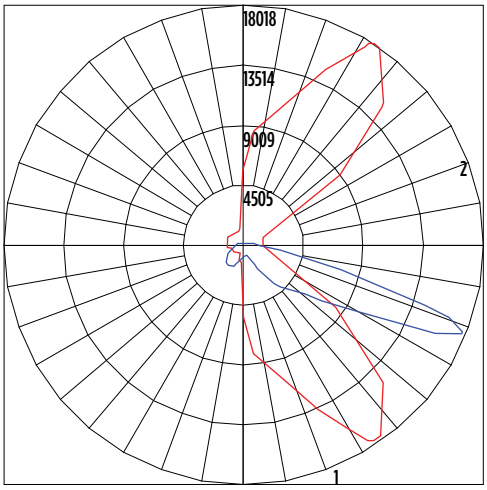


Vertical Plane Horizontal Cone


©LSI Industries Inc. All Rights Reserved. Specifications and dimensions subject to industry standard tolerances. Specifications subject to change without notice.

## PHOTOMETRICS (CONT.)

### XCN4 FT PT LED 18L 40

| Luminaire Data | |
|---|---|
| **Forward Throw Distribution** | |
| **Description** | 4000 Kelvin, 70 CRI |
| **Delivered Lumens** | 18,384 |
| **Watts** | 155.2 |
| **Efficacy** | 118 |
| **IES Type** | Type IV - Short |
| **BUG Rating** | B3-U2-G3 |

| Zonal Lumen Summary | | |
|---|---|---|
| **Zone** | **Lumens** | **% Luminaire** |
| **Low (0-30°)** | 1845 | 10% |
| **Medium (30-60°)** | 8218 | 45% |
| **High (60-80°)** | 7690 | 42% |
| **Very High (80-90°)** | 568 | 3% |
| **Uplight (90-180°)** | 63 | 0% |
| **Total Flux** | 18384 | 100% |

**ISO Footcandle**

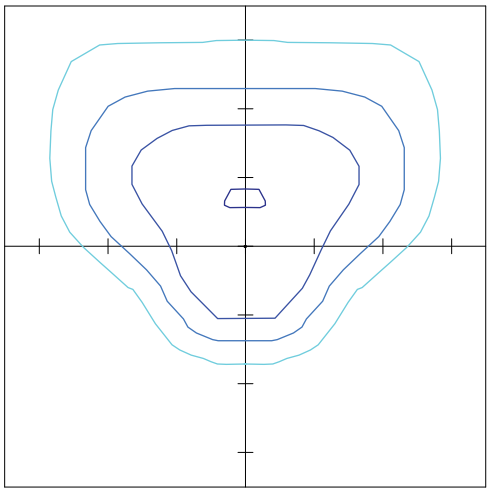

20' Mounting Height / 20' Grid Spacing

5 FC 2 FC 1 FC 0.5 FC

**Polar Curve**

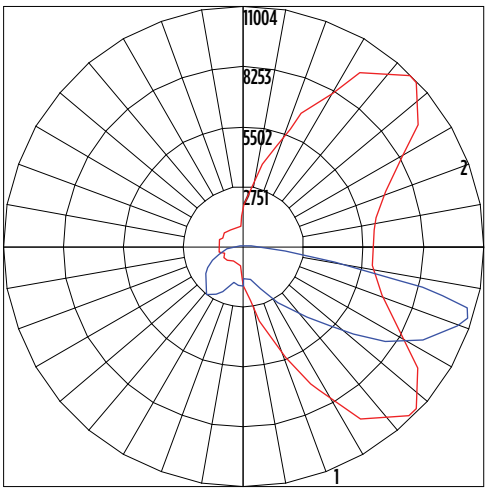


Vertical Plane Horizontal Cone

### XCN4 5W PT LED 18L 40

| Luminaire Data | |
|---|---|
| **Type 5 Wide Distribution** | |
| **Description** | 4000 Kelvin, 70 CRI |
| **Delivered Lumens** | 18,599 |
| **Watts** | 154.9 |
| **Efficacy** | 120 |
| **IES Type** | Type VS - Short |
| **BUG Rating** | B4-U2-G2 |

| Zonal Lumen Summary | | |
|---|---|---|
| **Zone** | **Lumens** | **% Luminaire** |
| **Low (0-30°)** | 1248 | 7% |
| **Medium (30-60°)** | 7776 | 42% |
| **High (60-80°)** | 9335 | 50% |
| **Very High (80-90°)** | 190 | 1% |
| **Uplight (90-180°)** | 50 | 0% |
| **Total Flux** | 18599 | 100% |

**ISO Footcandle**

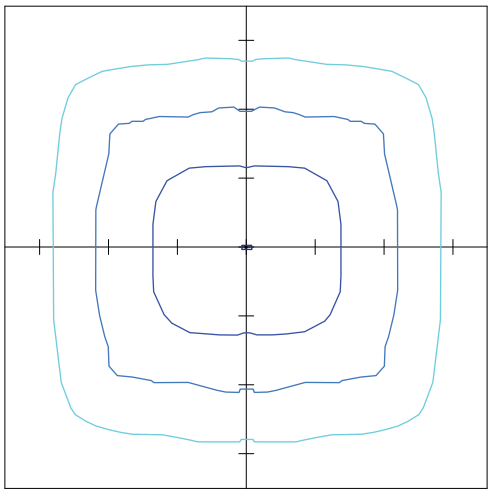

20' Mounting Height / 20' Grid Spacing

5 FC 2 FC 1 FC 0.5 FC

**Polar Curve**

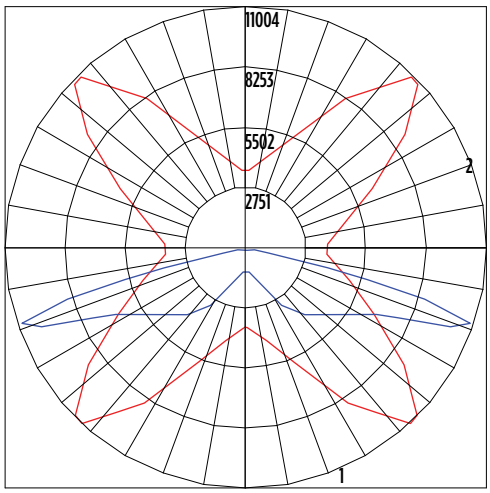


Vertical Plane Horizontal Cone



©LSI Industries Inc. All Rights Reserved. Specifications and dimensions subject to industry standard tolerances. Specifications subject to change without notice.

# Constitution (XCN4) Outdoor Decorative Post Top

Type : _____

**Have questions?** Call us at (800) 436-7800

## PRODUCT DIMENSIONS

Back to Quick Links

**Post Top Single**
Slipfits 4" Dia. Tenon (4N) or Pole

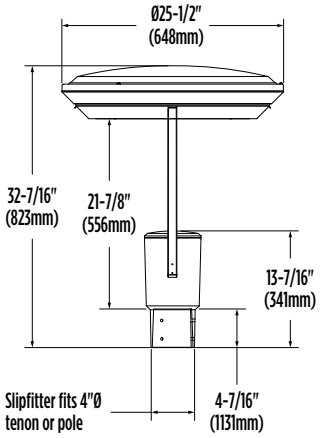


**Post Top with WM Accessory**

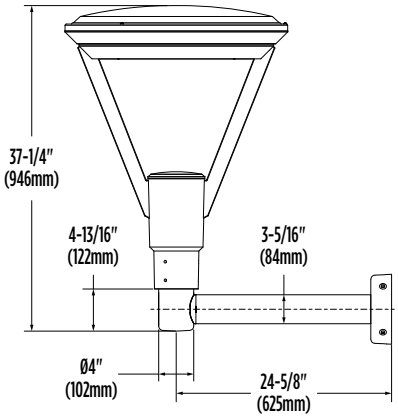


**Post Top with BK MPT BO (x2)**
Mounts to 4" or 5" Dia. D180 Bolt-on Pole
(select 3" reduced drilling pattern)

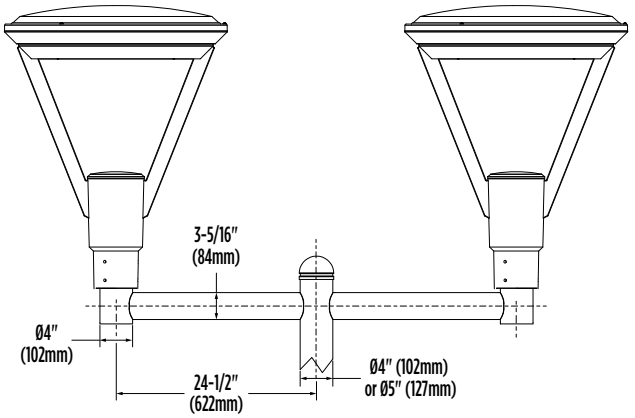


| Luminaire EPA Chart - Constitution | | |
|---|---|---|
| **Configuration** | **PT Single** | **PT D180°** with BK MPT BO (2) |
| **Mounting Style** | PT | PT |
| **EPA** | 1.0 | 2.0 |

### Integral Louver (IL)

Optional Integral Louver available for improved back-light control without sacrificing street side performance.

### Fixture Shown with Integral Louver (IL)

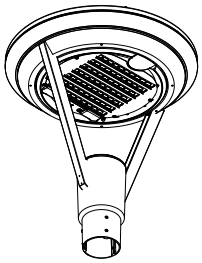

### 7 Pin Photoelectric Control

7-pin ANSI C136.41-2013 photocontrol receptacle option available for twist lock photocontrols or wireless control modules. Control accessories sold separately. Dimming leads from the receptacle will be connected to the driver dimming leads (Consult factory for alternate wiring).

### Fixture Shown with PCR 7P

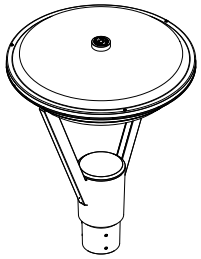

### Occupancy Sensor / Daylight Sensor (IMS)

Optional integral passive infrared motion and daylight sensor activates switching of luminaire light levels. Standard Factory settings: High level light is activated and increased to full bright upon detection of motion. Low light level (30% maximum drive current) is activated when target zone is absent of motion activity for ~5 minutes. Sensor has a detection cone of approximately 45°, see coverage diagram. Optional configurator tool allows for easy and safe programming of each luminaire from the ground level.

### Fixture Shown with IMSBT

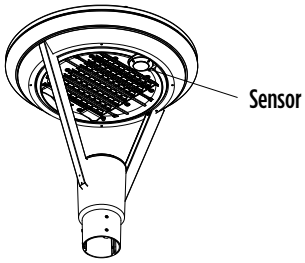



©LSI Industries Inc. All Rights Reserved. Specifications and dimensions subject to industry standard tolerances. Specifications subject to change without notice.

## CONTROLS

Back to Quick Links

### Integral Bluetooth™ Motion and Photocell Sensor (IMSBTxL)

Slim low profile sensor provides multi-level control based on motion and/or daylight. Sensor controls 0-10 VDC LED drivers and is IP66 rated for cold and wet locations (-40°F to 167°F). Two unique PIR lenses are available and used based on fixture mounting height. All control parameters are adjustable via an iOS or Android App capable of storing and transmitting sensor profiles.

Click here to learn more details about IMSBT

LEVITON App Apple Android

### AirLink Blue (ALBMRxLR, ALBCSx)

Wireless Bluetooth Mesh Outdoor Lighting Control System that provides energy savings, code compliance and enhanced safety/security for parking lots and parking garages. Three key components; Bluetooth wireless radio/sensor controller, Time Keeper and an iOS App. Capable of grouping multiple fixtures and sensors as well as scheduling time-based events by ZONE®. Radio/Sensor Controller is factory integrated into Area/Site, Wall Mounted, Parking Garage and Canopy luminaires.

Click here to learn more details about AirLink Blue

AirLink Blue App Apple

### Sensor Sequence of Operations

| Standard Programming | On Event | Off Event | On Light Level | Dim Light Level | Daylight Harvesting | Delay To Off | Sensitivity |
|---|---|---|---|---|---|---|---|
| **OMSBTxL/IMSBTxL** | Motion | No Motion | 100% | N/A | On; Auto Calibration | 20 minutes | High |
| **OMS** | Motion | No Motion | N/A | N/A | N/A | 30 seconds | Auto |

| Operation | Description |
|---|---|
| **On Event** | Trigger that activates lights to turn on; either automatic via motion detected or manually activated via push of button. |
| **Off Event** | Trigger that activates lights to turn off; either automatic via no motion detected or manually activated via push of button. |
| **On Light Level** | The light level that the fixtures will turn on to when ON EVENT occurs. |
| **Dim Light Level** | The light level that the fixtures will dim down to when no motion is detected. |
| **Delay to Dim** | The amount of time after which no motion is detected that the fixtures will be triggered to dim down. This sequence is optional, and sensor can be programmed to only trigger the fixture to turn off by entering 100% in this field. |
| **Delay to Off** | The amount of time after which no motion is detected that the fixtures will be triggered to turn off. If delay to dim is part of the programmed functionality, this is the amount of time after which no motion is detected after the fixture have already dimmed down. |
| **Sensitivity** | The sensitivity can be set to high, medium, low, or auto where applicable. High will detect smaller, simple motions. Low will only detect larger more complex motions. Auto temperature calibration adjusts the PIR sensitivity as ambient temperature rises to increase detection of heat movement through the field of view. |



©LSI Industries Inc. All Rights Reserved. Specifications and dimensions subject to industry standard tolerances. Specifications subject to change without notice.

# Constitution (XCN4) Outdoor Decorative Post Top

Type : _____

**Have questions?** Call us at (800) 436-7800

## POLES & BRACKETS

LSI offers a full line of poles and mounting accessories to complete your lighting assembly. Aluminum and steel in both square and round shafts. In addition, LSI offers round tapered, fluted and hinge based poles. Designed and engineered for durability and protected with our oven baked DuraGrip Protection System. Also available with our DuraGrip+ Protection system for unmatched corrosion resistance and an extended warranty. American made in our Ohio facility with industry leading lead times.

Click here to learn more details about poles & brackets.



**INTERNAL FLUSH MOUNT ADAPTOR (4" ROUND STRAIGHT)**

Optional flush mount accesory slips inside the top of a 4" round pole for a virtually seamless transition from pole to luminaire. Painted with LSI - Duragrip paint for unmatched corrosion resistance.



**SQUARE INTERNAL TENON ADAPTOR**

The Square Pole Tenon 4", 5", & 6" adaptors allow for the Opulence Post Top to be mounted on a square open top steel pole. Tenon adaptors slice into pole and bold through the securing the tenon to the pole. These tenons are made hearty steel tubing, are double-welded and are painted wiht LSI Duragrip paint. Shipped with mounting hardware assembled.



**ROUND EXTERNAL TENON ADAPTOR**

The Round Pole Top Tenon adaptors provide the right size tenon to ensure proper mounting of the Opulence Post Top on the Round tapered or straight poles. These tenons are made from heard steel tubing, are double-welded, and are painted with LSI Duragrip paint. Shipped with mounting hardware assembled.



**SPUN ALUMINUM COLLAR**
**Round Straight**

Optional one-piece spun aluminum collar for 4" or 5" diameter straight round poles. Features durable, high quality construction with aesthetically pleasing design that slips over the pole for increased theft deterrent.



**CONTEMPORARY BASE COVER & TAPERED POLE**

Optional contemporary base cover is cast from 356 alloy aluminum and provided with an access door. Available with 10 - 18' round taper pole shafts. The complete assembly is heat-treated to a T6 temper.



**DECORATIVE BASE COVER**
**Round Straight**

Optional decorative base cover has a two-piece die cast construction with stainless steel fasteners. Base cover is polyester powder coated to match pole. GBC base cover fits 4" and 5" diameter straight round poles. Includes 4" round pole adaptor molded from black silicone rubber.

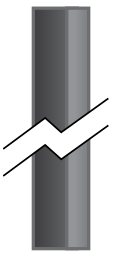

Square Pole 14'-30'

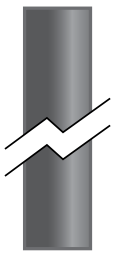

Round Pole 10'-30'

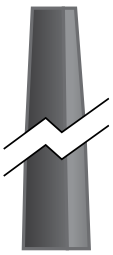

Tapered Pole 10'-30'


©LSI Industries Inc. All Rights Reserved. Specifications and dimensions subject to industry standard tolerances. Specifications subject to change without notice.